Tunnel Door (White)

Installation & Operator's Instruction Manual

October 2009 MV1894C

Chore-Time Warranty

Chore-Time Equipment ("Chore-Time") warrants each new Chore-Time product manufactured by it to be free from defects in material or workmanship for one year from and after the date of initial installation by or for the original purchaser. If such a defect is found by the Manufacturer to exist within the one-year period, the Manufacturer will, at its option, (a) repair or replace such product free of charge, F.O.B. the factory of manufacture, or (b) refund to the original purchaser the original purchase price, in lieu of such repair or replacement. Labor costs associated with the replacement or repair of the product are not covered by the Manufacturer.

Conditions and Limitations

1. The product must be installed by and operated in accordance with the instructions published by the **Manufacturer or Warranty will be void**.
2. Warranty is void if **all components** of the system are not original equipment supplied by the **Manufacturer**.
3. This product must be purchased from and installed by an authorized distributor or certified representative thereof or the Warranty will be void.
4. Malfunctions or failure resulting from misuse, abuse, negligence, alteration, accident, or lack of proper maintenance shall not be considered defects under the Warranty.
5. This Warranty applies only to systems for the care of poultry and livestock. Other applications in industry or commerce are not covered by this Warranty.

The **Manufacturer** shall not be liable for any **Consequential or Special Damage** which any purchaser may suffer or claim to suffer as a result of any defect in the product. **"Consequential"** or **"Special Damages"** *as used herein include, but are not limited to, lost or damaged products or goods, costs of transportation, lost sales, lost orders, lost income, increased overhead, labor and incidental costs and operational inefficiencies.*

THIS WARRANTY CONSTITUTES THE MANUFACTURER'S ENTIRE AND SOLE WARRANTY AND THIS MANUFACTURER EXPRESSLY DISCLAIMS ANY AND ALL OTHER WARRANTIES, INCLUDING, BUT NOT LIMITED TO, EXPRESS AND IMPLIED WARRANTIES AS TO MERCHANTABILITY, FITNESS FOR PARTICULAR PURPOSES SOLD AND DESCRIPTION OR QUALITY OF THE PRODUCT FURNISHED HEREUNDER.

Chore-Time Distributors are not authorized to modify or extend the terms and conditions of this Warranty in any manner or to offer or grant any other warranties for Chore-Time products in addition to those terms expressly stated above. An officer of CTB, Inc. must authorize any exceptions to this Warranty in writing. The Manufacturer reserves the right to change models and specifications at any time without notice or obligation to improve previous models.

Effective: **October 2009**

Chore-Time Equipment
A Division of CTB, Inc.
P.O. Box 2000 • Milford, Indiana 46542-2000 • U.S.A.
Phone (219) 658-4101 • Fax (877) 730-8825
Email: ctb@ctbinc.com • Internet: http//www.ctbinc.com

Thank You

The employees of Chore-Time Equipment would like to thank your for your recent Chore-Time purchase. If a problem should arise, your Chore-Time distributor can supply the necessary information to help you.

Contents

* Legend: C = Customer (end user), D = Distributor (sales), I = Installer of equipment

General

Support Information

The Chore-Time Tunnel Door is to be used to control the airflow in a Tunnel Ventilated poultry house. Using this equipment for any other purpose or in a way not within the operating recommendations specified in this manual will void the warranty and may cause personal injury.

This manual is designed to provide comprehensive planning, installation, safety, operation, and parts listing information. The Table of Contents provides a convenient overview of the information in this manual. The Table of Contents also specifies which pages contain information for the sales personnel, installer, and consumer (end user).

Distributor and Installer Information

Please fill in the following information about your Product.
Keep this manual in a clean, dry place for future reference.

Distributor's Name _____

Distributor's Address _____

Distributor's Phone _____ **Date of Purchase** _____

Installer's Name _____

Installer's Address _____

Installer's Phone _____ **Date of Installation** _____

System Specifications _____

_____

About This Manual

The intent of this manual is to help you in two ways. One is to follow step-by-step in the order of assembly of your product. The other way is for easy reference if you have questions in a particular area.

Important ! **Read ALL instructions carefully before starting construction.**

Important ! **Pay particular attention to all SAFETY information.**

- *Metric measurements are shown in millimeters and in brackets, unless otherwise specified.* “ " ” equals inches and “ ' ” equals feet in English measurements.
  Examples:
  1" [25.4]
  4' [1 219]
- Optional equipment contains necessary instructions for assembly or operation.
- Major changes from the last printing will be listed on the back cover.
- Very small numbers near an illustration (*i.e.,* 1257-48) are identification of the graphic, not a part number.

Safety Information

Caution, Warning and Danger Decals have been placed on the equipment to warn of potentially dangerous situations. Care should be taken to keep this information intact and easy to read at all times. Replace missing or damaged safety decals immediately.

Using the equipment for purposes other than specified in this manual may cause personal injury and/or damage to the equipment.

Installation

Framing

It is very important to make sure the Tunnel Door opening is flat. A maximum of 1/2" rise or fall throughout the length of the opening is all that is acceptable **(See Figure 1)**. Failure to do so will result in a poorly sealed Tunnel Door. The same rules apply for pre-assembled doors.

Rough Opening Height

Frame up the rough opening **(Item 1, Figure 1)** so that the height is 1" less than the Tunnel Door height.

Example: 4 ft (48") Tunnel Door = 47" Rough Opening height;
5 ft (60") Tunnel Door = 59" Rough Opening height

Rough Opening Width

The Rough Opening width is determined by the length of the Doors. The opening width should be 2" less than the Tunnel Door Length.

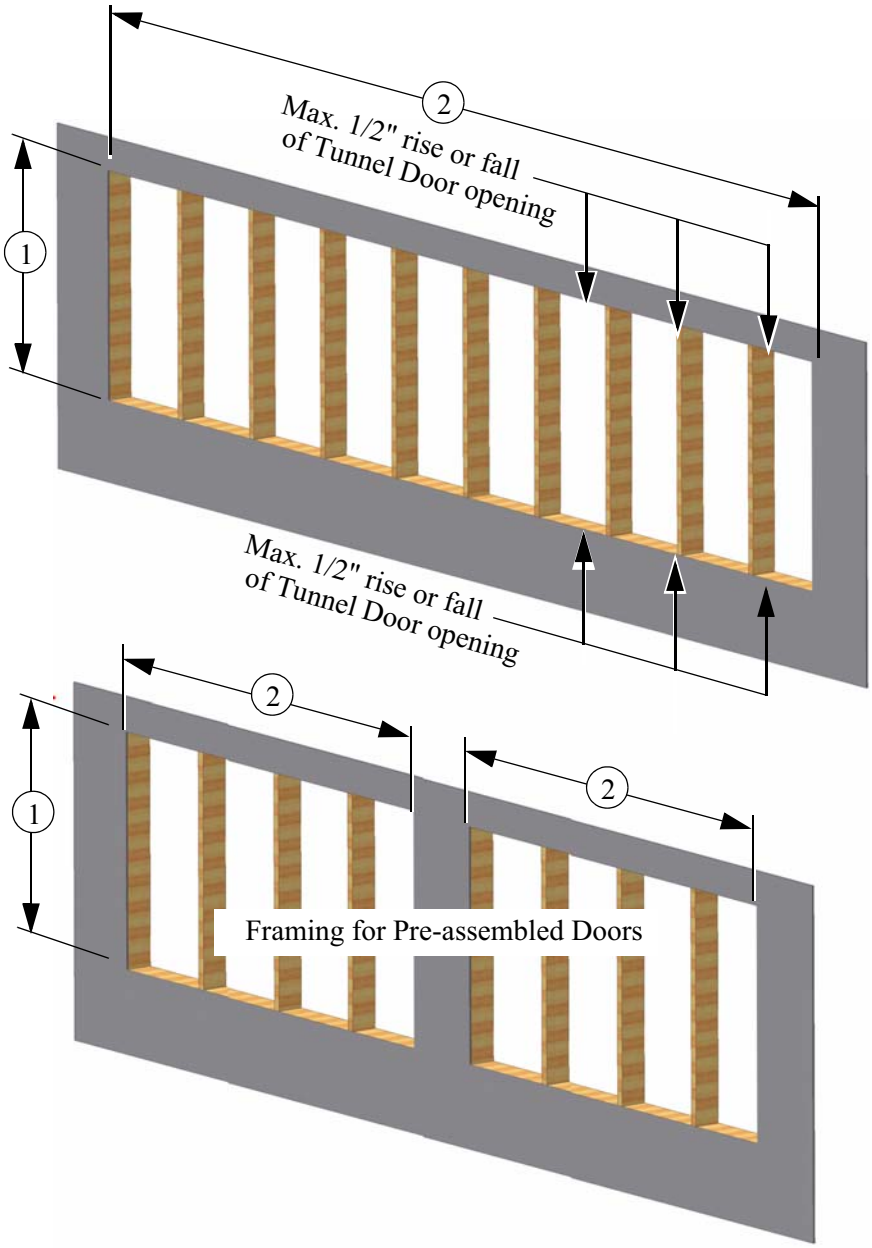

Item	Description
1	Rough Opening Height (Door Height -1")
2	Rough Opening Length (Door Length -2")

Figure 1. Framing

Door Hinge Board

Attach a treated 2 X 4 **(Item 1, Figure 2)** to the bottom of the Rough Opening using 3 1/2" Long Deck Grade Wood Screws in a zig-zag pattern, spacing the screws approximately 6" apart as shown in **Figure 1**. The Door Hinge Board Must Protrude 2" Past Both Ends Of The Rough Opening to allow for proper sealing of the Tunnel Door**.**

Note: The Top Of The Door Hinge Board Must Be Chalk Line Straight Horizontally To Ensure A Smooth, Flat Sealing Surface.

Sealing the Rough Opening

Use Clear Silicone Caulk in the joints between the wall and the Door Hinge Board, as well as between each Door Hinge Board to ensure a proper seal from the environment **(See Figure 2)**.

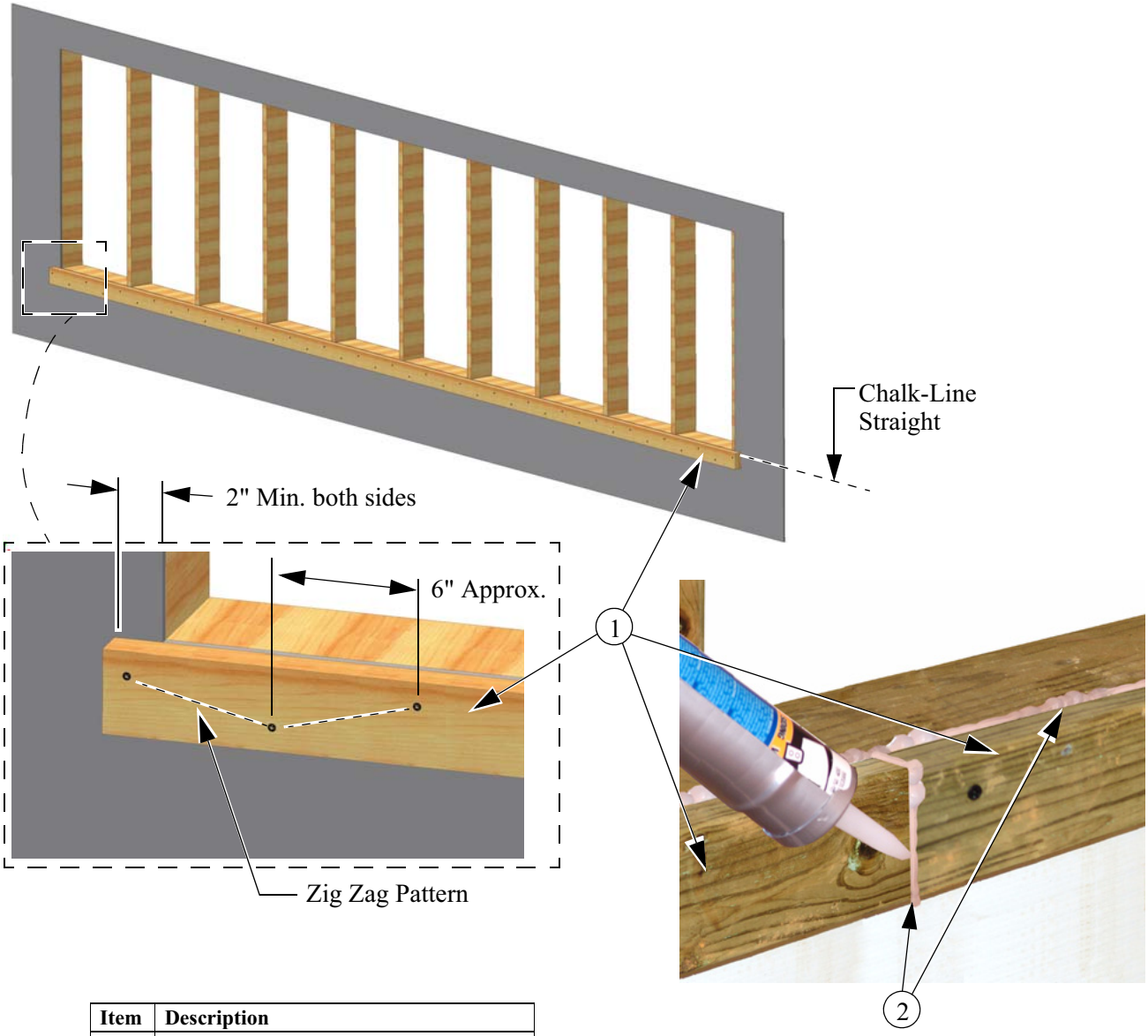

Item	Description
1	Door Hinge Board
2	Clear Silicone Caulk

Figure 2. Door Hinge Board

Door Bottom Seal (Black P-Seal)

For Continuous Door applications start at one end of the Framed Opening and Unroll the Black P-Seal **(Item 1, Figure 3)** the full length of the Tunnel Door(s) Opening. Place the Black P-Seal up on the top edge of the Door Hinge Board **(Item 2),** and slide it down so that it is flush with the end of Door Hinge Board, and the Bulb of the Black P-Seal is flush with the front side of the Door Hinge Board **(See Figure 3)**. Use a 1" Galvanized Roofing Nail **(Item 2)** to tack down the Black P-Seal starting approximately 1" from the end and continue tacking it down approximately every 6".

Caution: Do not pound the head of the Roofing Nail through the surface of the Door Seal.

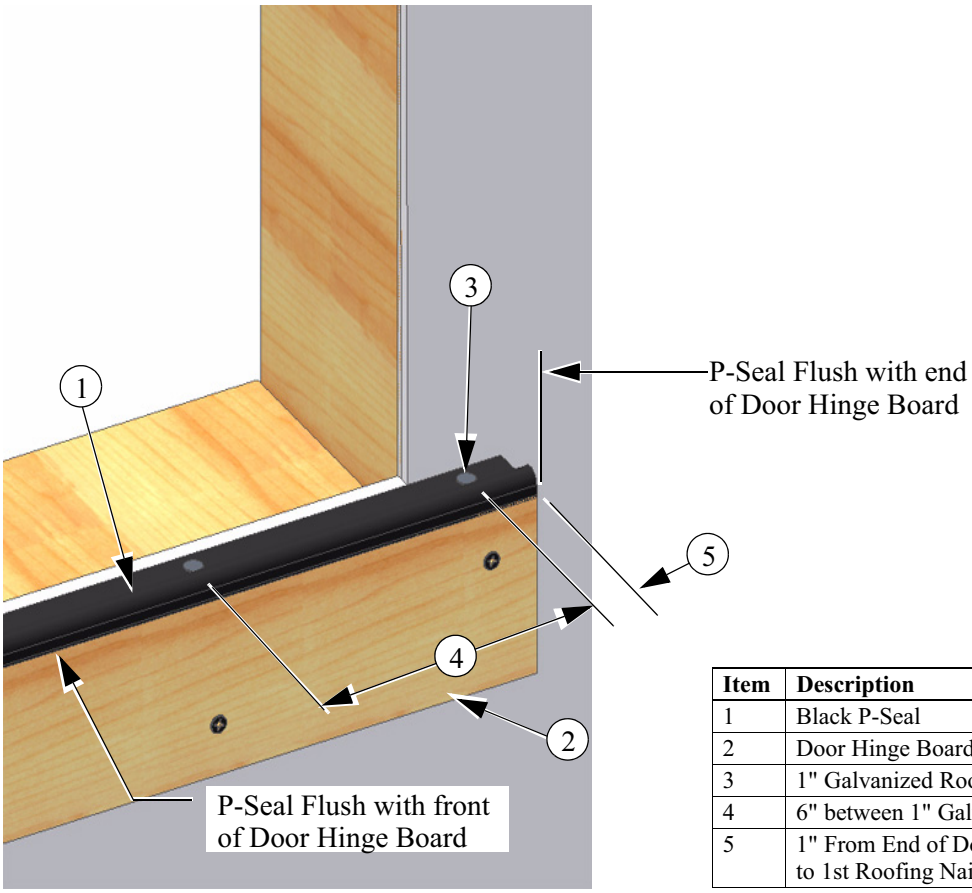

Item	Description
1	Black P-Seal
2	Door Hinge Board
3	1" Galvanized Roofing Nail
4	6" between 1" Galv. Roofing Nails
5	1" From End of Door Hinge Board to 1st Roofing Nail

Figure 3. Attaching the Black P-Seal

Attaching Perimeter Seal (White P-Seal)

Place the White P-Seal **(Item 1, Figure 4)** on the floor at one end of the Rough Opening and roll it out 10' past the opposite end. Start with the bulb of the White P-Seal flush with the inside edge of the framed opening and the end Flush with the Black P-Seal **(Item 3)**. Make sure that the White P-Seal is compressed down tightly against the Black P-Seal and attach it to the framing with a 1" Galvanized Roofing Nail **(Item 2)** as close to the end of the Seal as possible. While keeping the bulb of the P-Seal Flush with the Rough Opening, stretch it upward and use a 1" Galvanized Roofing Nail to tack it approximately 6" below the top of the Rough Opening **(See Figure 4)**. Finish attaching the P-Seal up the entire side flush with the inside edge of the Rough Opening with 1" Galvanized Roofing Nails approximately every 6". At the Corner, Cut slits in the White P-Seal to allow it to bend and attach with Galv. Roofing Nails **as shown in Figure 4**. Attach the Seal across the entire top of the Rough opening with 1" Galv. Roofing Nails every 6" making sure the P-Seal is stretched tight with no sagging. Repeat the same procedure to attach the Seal around the remaining corner and down the other side.

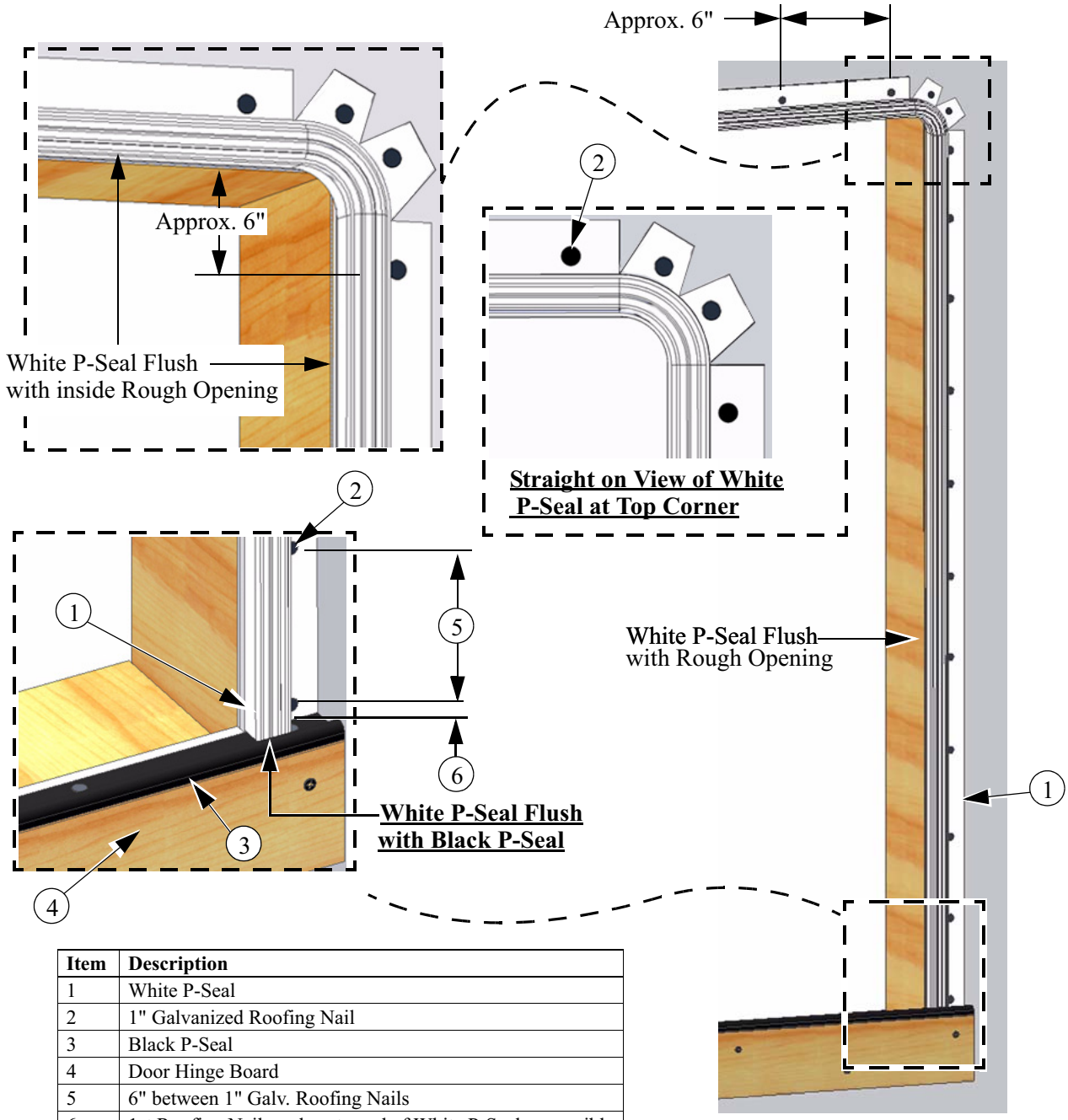

Item	Description
1	White P-Seal
2	1" Galvanized Roofing Nail
3	Black P-Seal
4	Door Hinge Board
5	6" between 1" Galv. Roofing Nails
6	1st Roofing Nail as close to end of White P-Seal as possible

Figure 4. Attaching the White P-Seal

Door Assembly/Installation

For Pre-assembled Tunnel Door instructions skip to page 13.

Bottom C-Channel with Hinges

Danger: Be very careful when handling the Bottom C-Channel with Hinges. The edges of the Hinges are very sharp.

Obtain a 10’ piece of C-Channel with Hinges **(Item 1, Figure 5)** and cut it in half making two 5’ long pieces. Only one of the 5’ pieces will be used at this time, but set the other one aside and it will be used later.

Important: Make sure that the Cut is precise and accurate. Inaccurate cutting could compromise the performance of the Tunnel Doors and cause a material shortage.

Item	Description
1	10’ C-Channel with Hinges

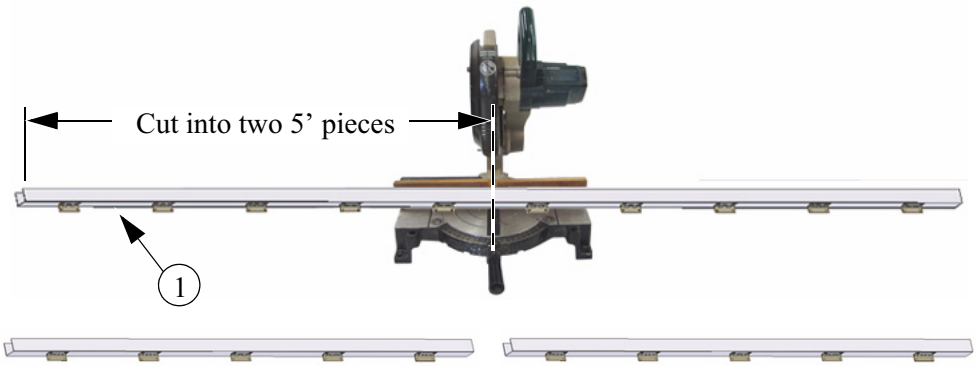

Figure 5. Cutting 10’ C-Channel w/Hinges

Obtain an FRP Panel **(Item 1, Figure 6)** and lay it on the ground. Pick up the 5’ C-Channel w/hinges **(Item 2)** with the hinges towards the front **(See Figure)** and slide it onto the bottom of the FRP Panel until it is flush with the end of the panel **as shown**. Use Self-Tapping Screws **(Item 3)** to attach the C-Channel to the FRP Panel starting with the 1st screw 1/4" from the end and 1/4" from the top of the C-Channel, and then continue installing Screws every 6" **as shown**.

Important: Do Not strip out the Self-tapping Screws by over tightening. Stop the drill as soon as the head of the Screw makes contact with the C-Channel surface!

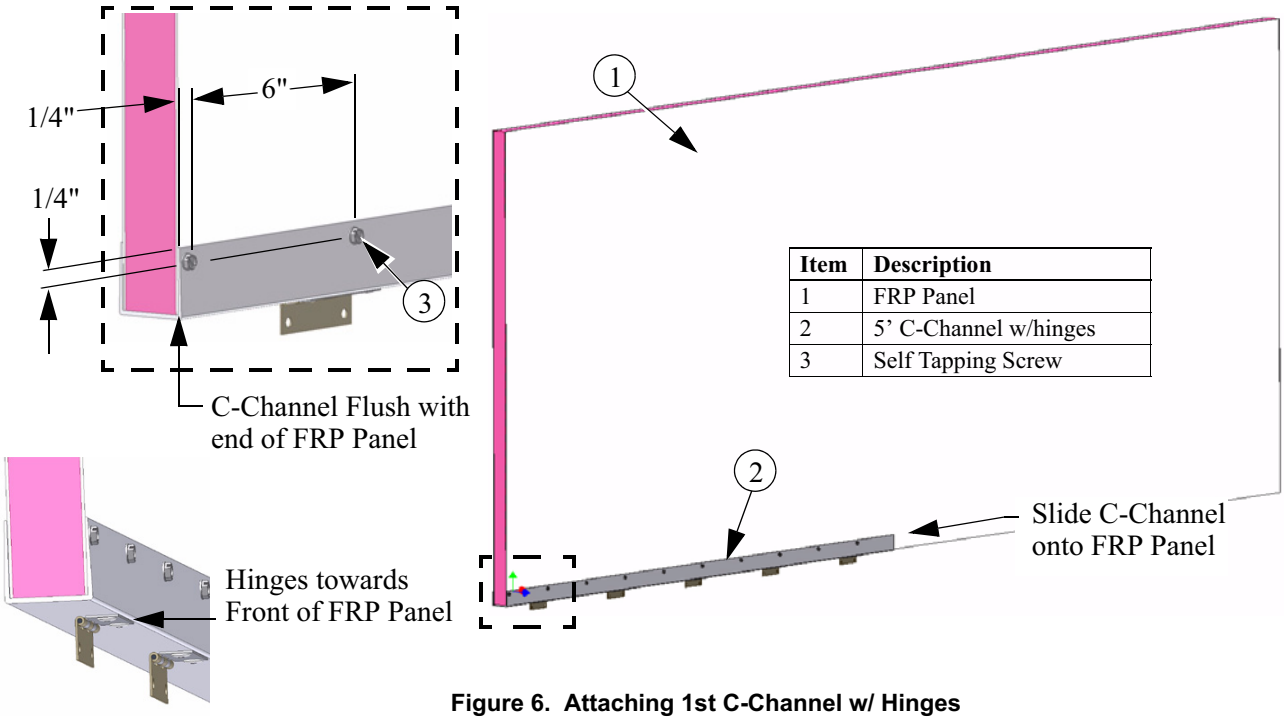

Item	Description
1	FRP Panel
2	5’ C-Channel w/hinges
3	Self Tapping Screw

Figure 6. Attaching 1st C-Channel w/ Hinges

Slide a 10’ C-Channel with Hinges **(Item 3, Figure 7)** onto the FRP Panel **(Item 1)**, with the Hinges towards the front, until it meets the 5’ C-Channel w/hinges **(Item 2)** already attached in the previous step. Use the Self Tapping Screws to attach the C-Channel to the FRP Panel starting with the first screw 1/4" from the end and a Screw every 6" **as shown**.

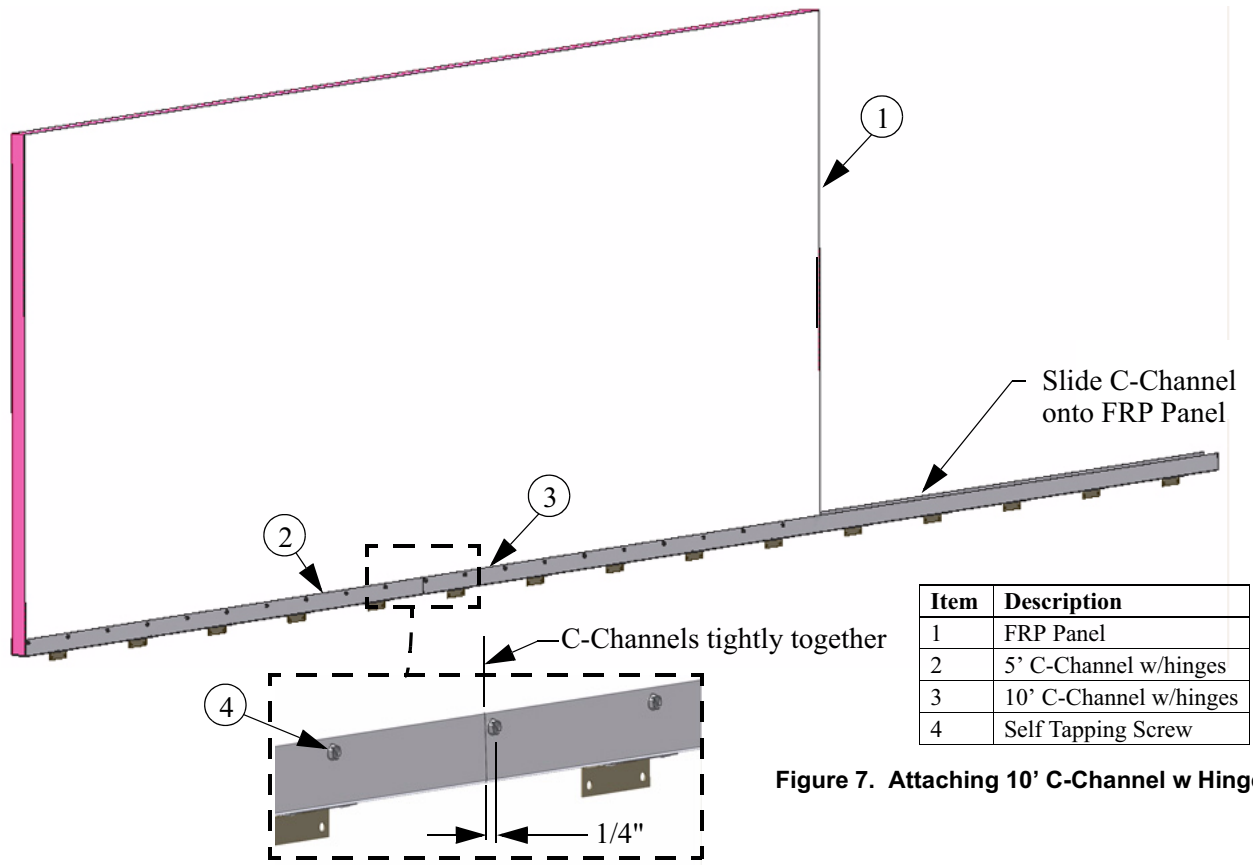

Item	Description
1	FRP Panel
2	5’ C-Channel w/hinges
3	10’ C-Channel w/hinges
4	Self Tapping Screw

Figure 7. Attaching 10’ C-Channel w Hinges

Top C-Channel

Obtain a 10’ piece of Top C-Channel **(Item 1, Figure 8)** and cut it in half making two 5’ long pieces. Only one of the 5’ pieces will be used at this time, but set the other one aside and it will be used later.

Important: Make sure that the Cut is precise and accurate. Inaccurate cutting could compromise the performance of the Tunnel Doors and cause a material shortage.

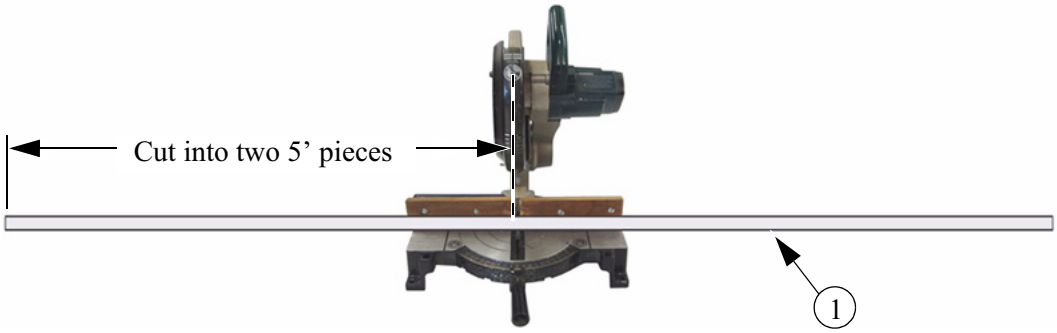

Item	Description
1	10’ Top C-Channel

Figure 8. Cutting 10’ Top C-Channel into two 5’ pieces

Slide the 5’ Top C-Channel **(Item 1, Figure 9)** that you just cut onto the FRP Panel **(Item 2)** until it is flush

with the end. Fasten the Top C-Channel to the FRP Panel with two Self Tapping Screws **(Item 3)** 1/4" above the bottom of the Top C-Channel and 1/4" from each end **as shown**.

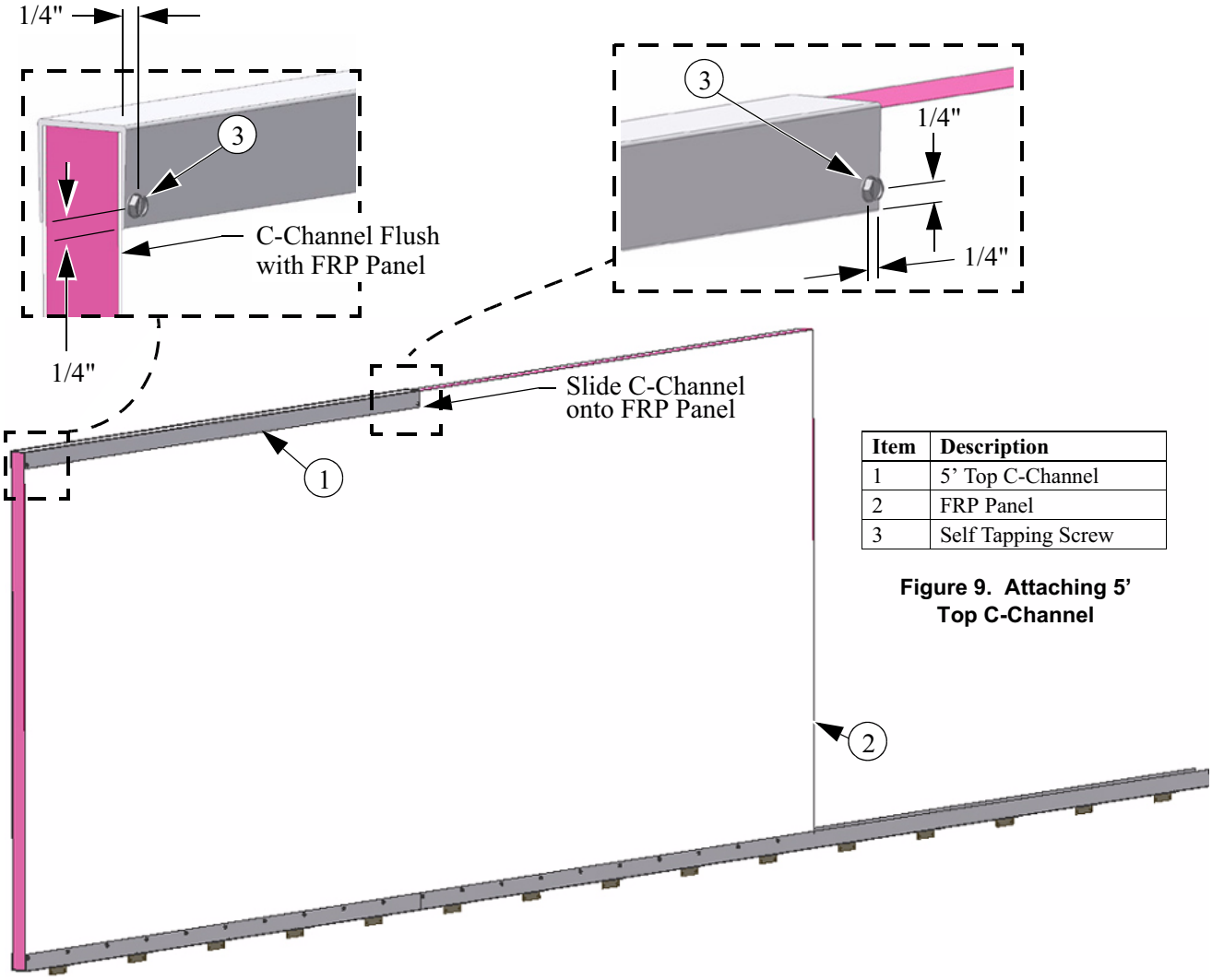

Item	Description
1	5' Top C-Channel
2	FRP Panel
3	Self Tapping Screw

Figure 9. Attaching 5' Top C-Channel

Attaching the Door Assembly

Lift the entire 1st Door assembly **(Item 1, Figure 10)** and rest it on the Black P-Seal **(Item 2)** that was attached to the bottom of the Rough Opening. Position the Door Assembly such that the Edge of the Door is flush with the outside of the bulb of the White P-Seal **(Item 3)**. Make sure that the Black P-Seal does not roll over **as shown**. Be sure that the Hinges are flipped down as shown **in Figure 10**.

Caution: It is normal for the Black P-Seal to deform under the weight of the Door Assembly. **Do Not slide the Door Assembly on the Black P-Seal because the Black P-Seal will tear or roll compromising Tunnel Door performance**.

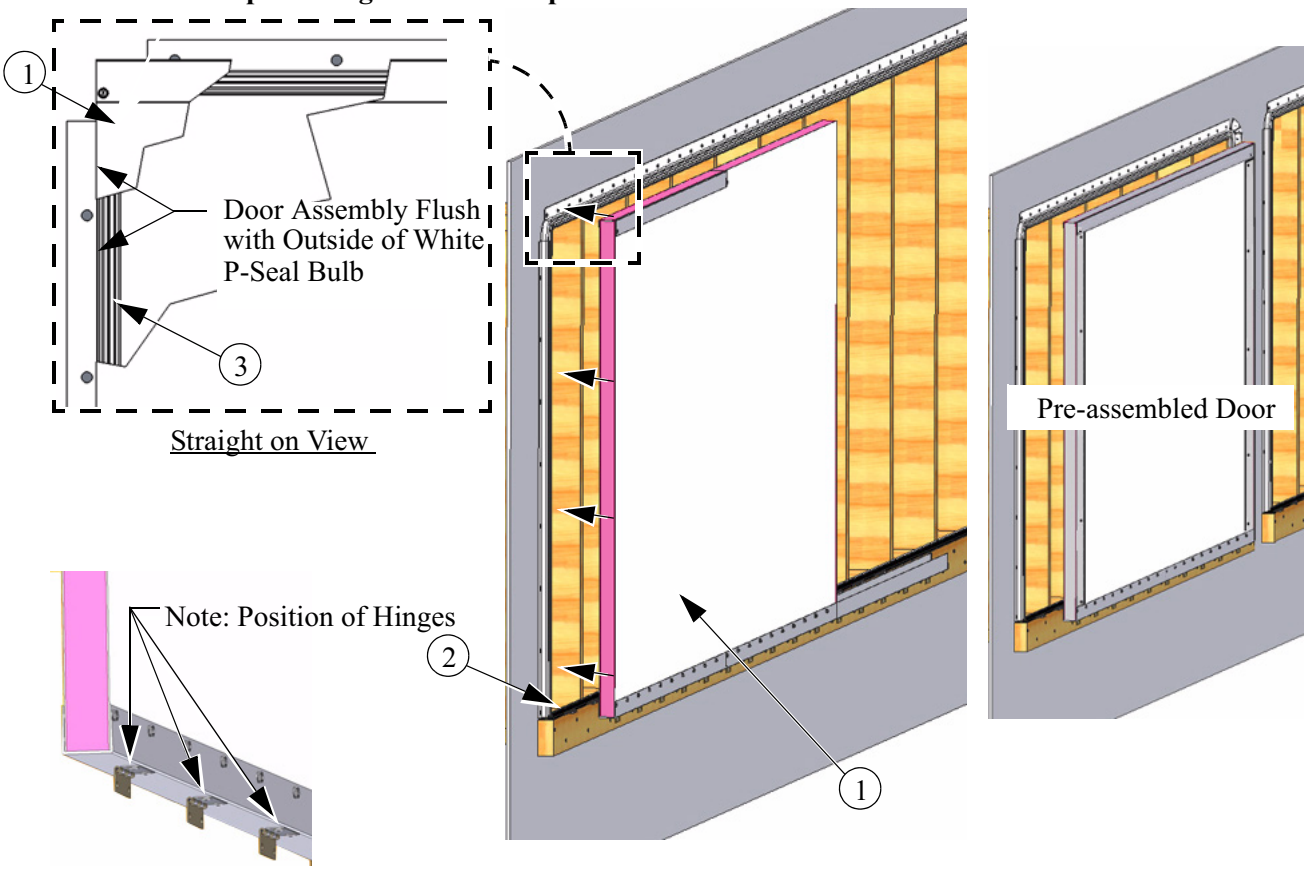

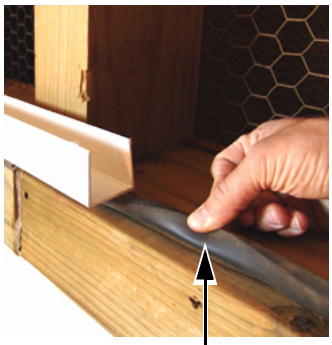

Do Not allow the Black P-Seal to Roll

Item	Description
1	Door Assembly
2	Black P-Seal
3	White P-Seal

Figure 10. Positioning the Door Assembly

With the Door Assembly in position have one person pull down on the Door to compress the Black P-Seal, and a second person insert #9 x 3" Quadrex Drive Wood Screws **(Item 1, Figure 11)** into ***only*** the Hinges that are ***directly under the FRP Panel*** and attach it to the Door Hinge Board **(Item 2)**. In Pre-assembled Door applications this would include all of the Hinges. If Angle the Wood screws down as you put them in to pull the Door down tight to the Black P-Seal. **(Item 3)** When all the Wood Screws are in there should be ***no*** daylight showing between the Black P-Seal and the Door **(See Figure)**.

Caution: Do not overtighten Wood screws. Only torque until Screw head comes in contact with the Hinge.

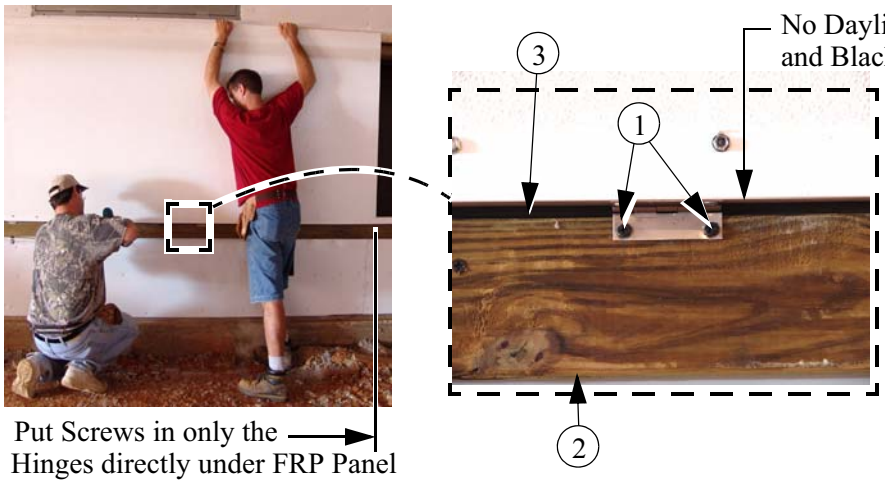

Item	Description
1	#9-3" Quadrex Drive Wood screw
2	Door Hinge Board
3	Black P-Seal

Figure 11. Attaching the Door Assembly

Skip to page 19 if installing Pre-assembled Doors.

End C-Channel

Obtain a 10' piece of C-Channel **(Item 1, Figure 12)** and cut off two 48-1/4" pieces. Notch Both ends of each 48-1/4" piece **as shown in Figure 12**. Only one of the 48-1/4' pieces will be used at this time, but set the other one aside and it will be used at the other end later.

Important: Make sure that the Cut is precise and accurate. Inaccurate cutting could compromise the performance of the Tunnel Doors and possibly cause a material shortage.

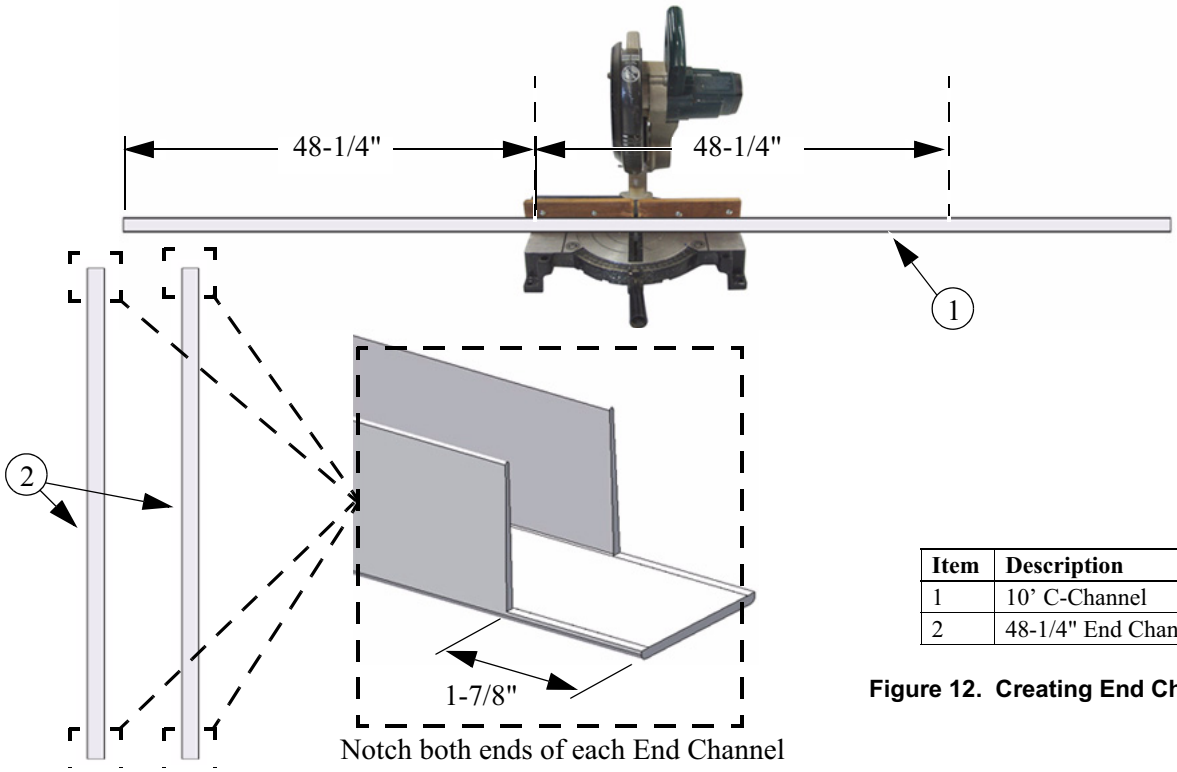

Item	Description
1	10' C-Channel
2	48-1/4" End Channel

Figure 12. Creating End Channel

Attach one of the End C-Channels to the end of the FRP Panel with Sheet Metal Screws using a 6" spacing. **(See Figure 13 below)**.

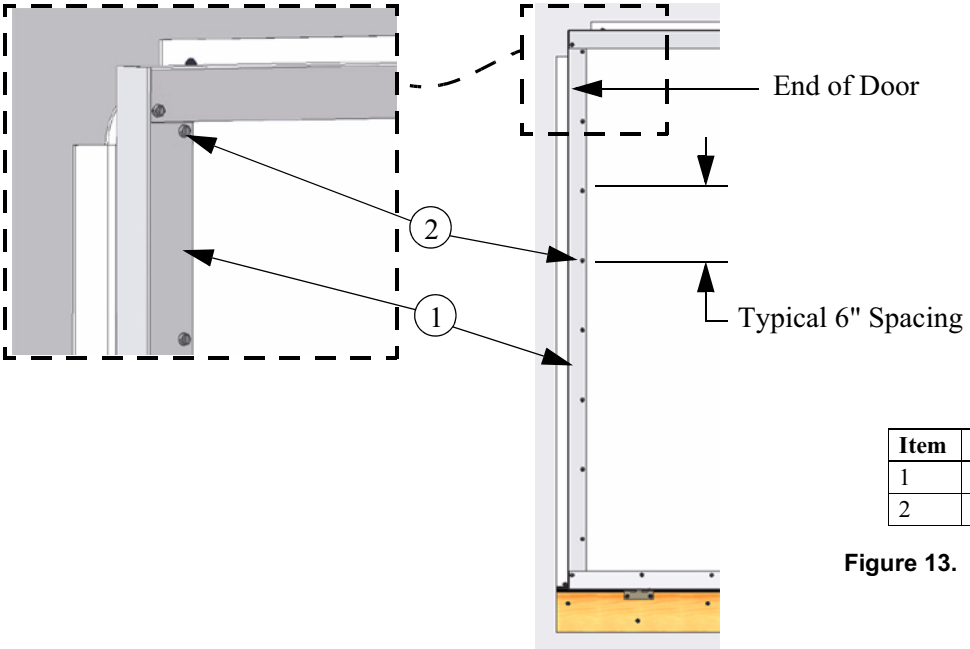

Item	Description
1	First 48-1/4" End Channel
2	Sheet Metal Screw

Figure 13. Attaching End C-Channel

H-Channel between FRP Panels

Obtain an H-Channel. **(Item 1, Figure 14)**

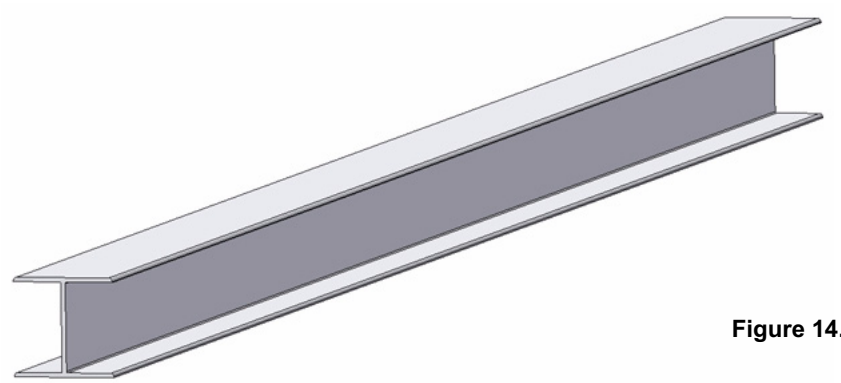

Item	Description
1	H-Channel

Figure 14. H-Channel between FRP Panels

Two people, one at each end, Pick up a 2nd FRP Panel **(Item 1, Figure 15)** and angle the bottom left corner down to get it started sliding into the C-Channel with Hinges **(Item 2)** approximately 2' to 3' from the 1st FRP Panel **(Item 3)** that was installed. Slide the entire FRP Panel down into the C-Channel with Hinges.

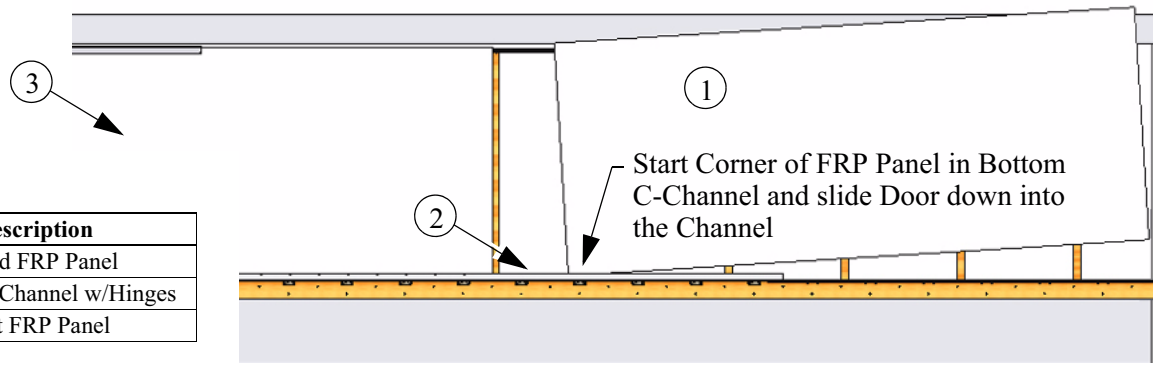

Item	Description
1	2nd FRP Panel
2	C-Channel w/Hinges
3	1st FRP Panel

Figure 15. Sliding FRP Panel into C-Channel w/Hinges

Slip the 45-1/4" H-Channel pieces **(Item 1, Figure 16)** over the 1st and 2nd FRP Panel **(Items 2, and 3) as shown in Figure 16**.

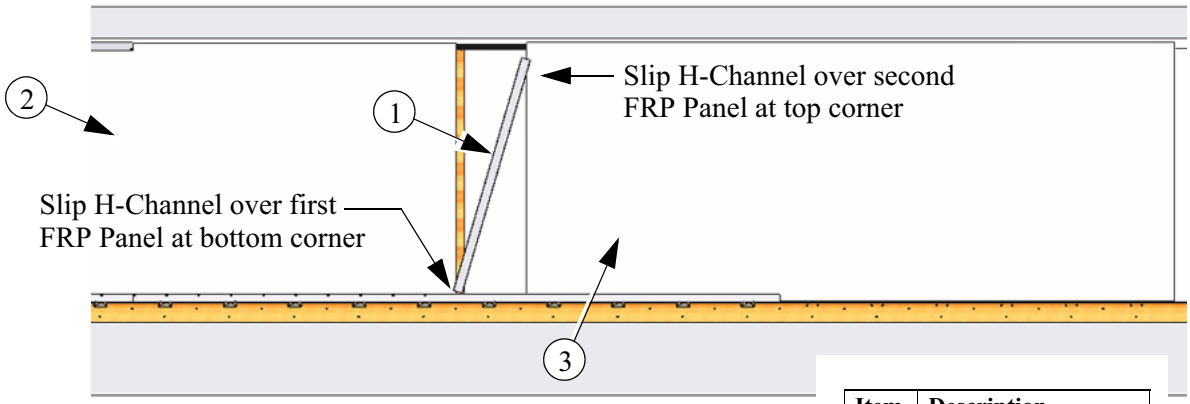

Item	Description
1	45-1/4" H- Channel
2	1st FRP Panel
3	2nd FRP Panel

Figure 16. Slip H-Channel over FRP Panels

Attaching second FRP Panel

Have one person push the 2nd FRP Panel **(Item 1, Figure 17)** towards the 1st FRP Panel **(Item 2)** while the other person keeps the H-Channel slipping over the FRP Panels as they come together. With the 1st and 2nd FRP Panels, and the H-Channel **(Item 3)** pushed tightly together, use Self-Tapping Screws **(Item 4)** every 6" to fasten the Second FRP Panel to the Bottom C-Channel with Hinges **(Item 5)**.

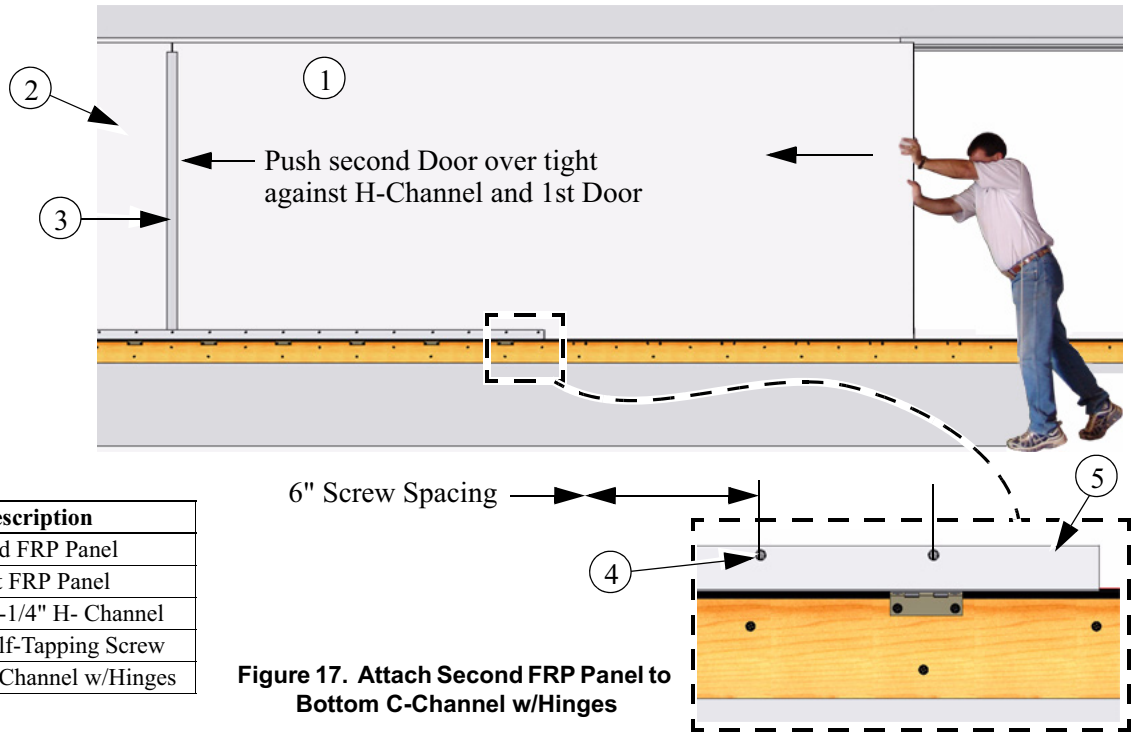

Item	Description
1	2nd FRP Panel
2	1st FRP Panel
3	45-1/4" H- Channel
4	Self-Tapping Screw
5	C-Channel w/Hinges

Figure 17. Attach Second FRP Panel to Bottom C-Channel w/Hinges

Installing a 10’ Top C-Channel

Slide a 10’ Top C-Channel **(Item 1, Figure 18)** onto the top of the FRP Panels and push it over until it is flush with the 5’ Top C-Channel **(Item 2)**. Use a Self-Tapping Screw **(Item 4)** at each end of the 10’ Top C-Channel to attach it to the FRP Panels 1/4" from the end and 1/4" up **as shown**. Use two Self-Tapping Screws

(Item 4) to attach the top C-Channel to the H-Channel as shown.l

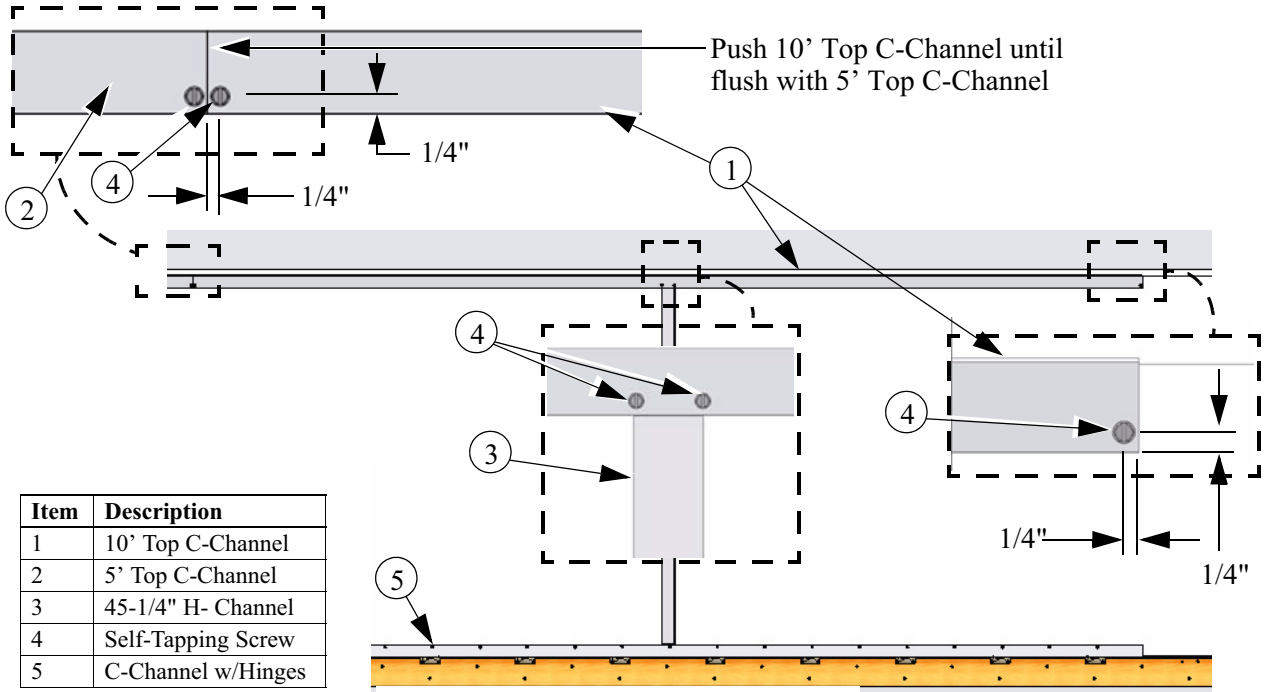

Item	Description
1	10’ Top C-Channel
2	5’ Top C-Channel
3	45-1/4" H- Channel
4	Self-Tapping Screw
5	C-Channel w/Hinges

Figure 18. Attaching 10’ Top Channel

Attaching the Second C-Channel with Hinges (10’ Channel)

Pull slightly out on the end of the Door Assembly and Slide a second 10’ Bottom C-Channel w/hinges **(Item 1, Figure 19)** onto the bottom of the Second FRP Panel **(Item 2).** Use an object with a flat surface to tap the 10’ C-Channel w/hinges over until it is flush with 1st 10’ C-Channel w/hinges. A short 2x4 works very well **(See Figure 19)**. ***Be very careful*** not to bend or ding the corners of the C-Channel w/hinges. Make sure that the Hinges are all in the down position and that the Black P-Seal **(Item 3)** does not get rolled **(See Figure 19)**. Attach the Second Bottom C-Channel with Hinges to the Second FRP Panel with Self-Tapping Screws **(Item 4)** every 6" out to the end of the Second FRP Panel. Do ***not*** attach the Bottom C-Channel with Hinges to the Bottom Hinge Board until after the next FRP Panel is in place.

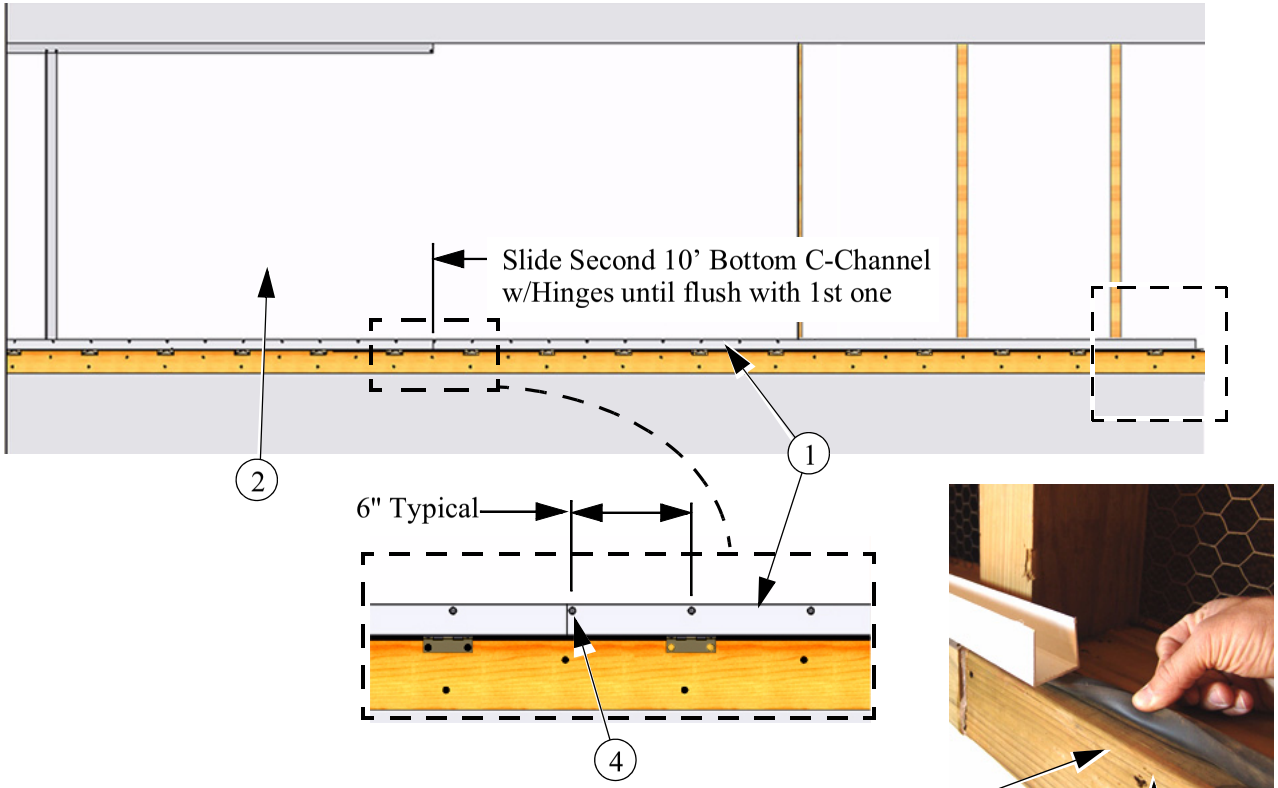

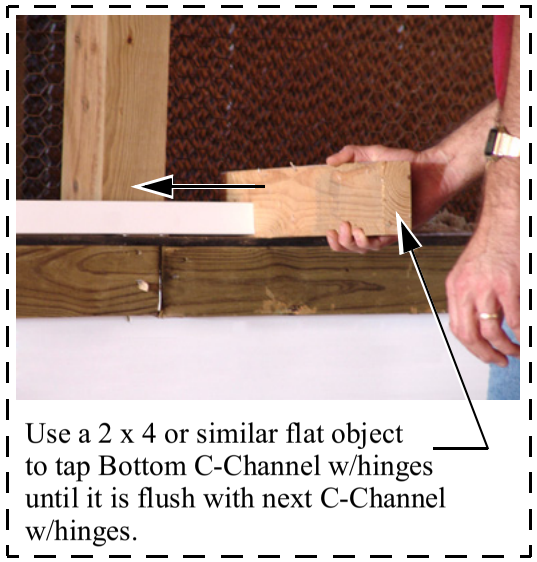

Item	Description
1	10’ Bottom C-Channel w/Hinges
2	Second FRP Panel
3	Black P-Seal
4	Self-Tapping Screw

Figure 19. Attaching the Second 10’ Bottom C-Channel w/Hinges

Installing Flat Washers & Nylon Split Bolt on the 1st FRP Panel

If installing Pre-assembled Doors skip this paragraph because Pre-assembled Doors are pre-drilled. Obtain a Large Flat Washer **(Item 1, Figure 20)** and a marking utensil. Place the Large Flat Washer in the upper most corner of the end of the First FRP Panel **(Item 2)** so that it is Flush with the End Channel **(Item 3)** and the Top C-Channel **(Item 4)** and mark the center point of the washer. Drill a 1/2" Hole through the FRP Panel at the Center mark you just made **(See Figure 21)**.

Install a Large Flat Washer **(Item 1, Figure 22)** onto a Slotted Nylon Split Bolt **(Item 5),** and from the back side of the FRP Panel, push it through the 1/2" hole drilled in **Figure 21**.

Important: The Large Flat Washers are sharp on one side from the manufacturing process. To determine which side is sharp, run your thumb across the inside diameter of the Washer. The sharp side (burr side) must always face towards the FRP Panel or it will cut into the Nylon Rope and Nylon Nut.

Install a second Large Flat Washer on the front side of the FRP Panel making sure that the sharp side (burr side) is towards the FRP Panel.

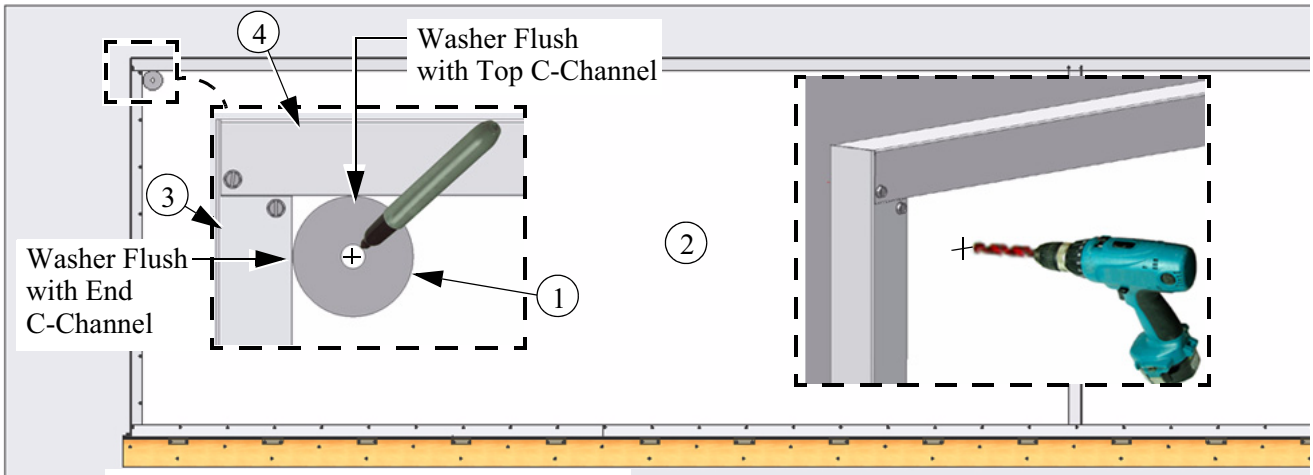

Figure 20. Marking center point for hole in FRP Panel

Figure 21. Drilling 1/2" hole in FRP Panel

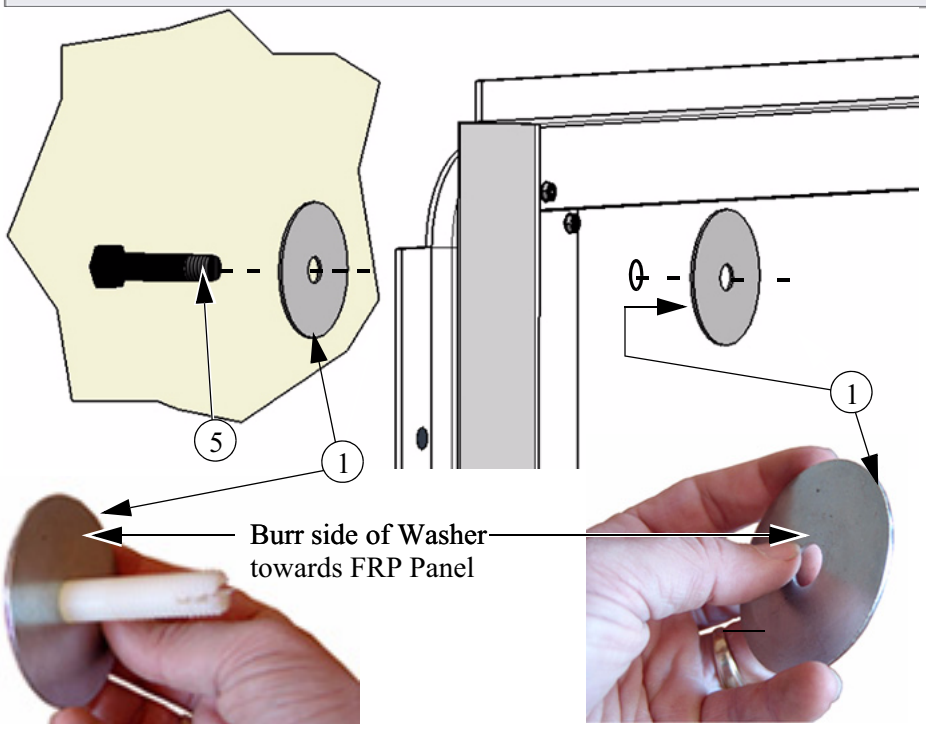

Item	Description
1	Large Flat Washer
2	First FRP Panel
3	End C-Channel
4	Top C-Channel
5	Nylon Split Bolt

Figure 22. Installing Large Flat Washers

Installing Nylon Rope on 1st FRP Panel to temporarily hold Door(s) in place

If installing continuous Doors they will soon become too heavy to handle and should be temporarily tied up to ease assembly and keep the Doors from coming down unexpectedly. To do this, obtain the Nylon Rope and cut off a 6' piece. Burn the ends to keep the rope from fraying. Put a Knot **(See Figure 23)** in the end of the Nylon Rope. Push the knotted end of the 6' Nylon Rope **(Item 1)** into the slot in the end of the Nylon Split Bolt **(Item 2)** leaving approximately 6"-12" at the end **as shown**. Put on a Split Bolt Cap **(Item 3)** and hand tighten.

Caution: **Do Not use tools of any kind to tighten the Split Bolt Cap. Using tools could over torque the Split Bolt Cap and Nylon Split Bolt.**

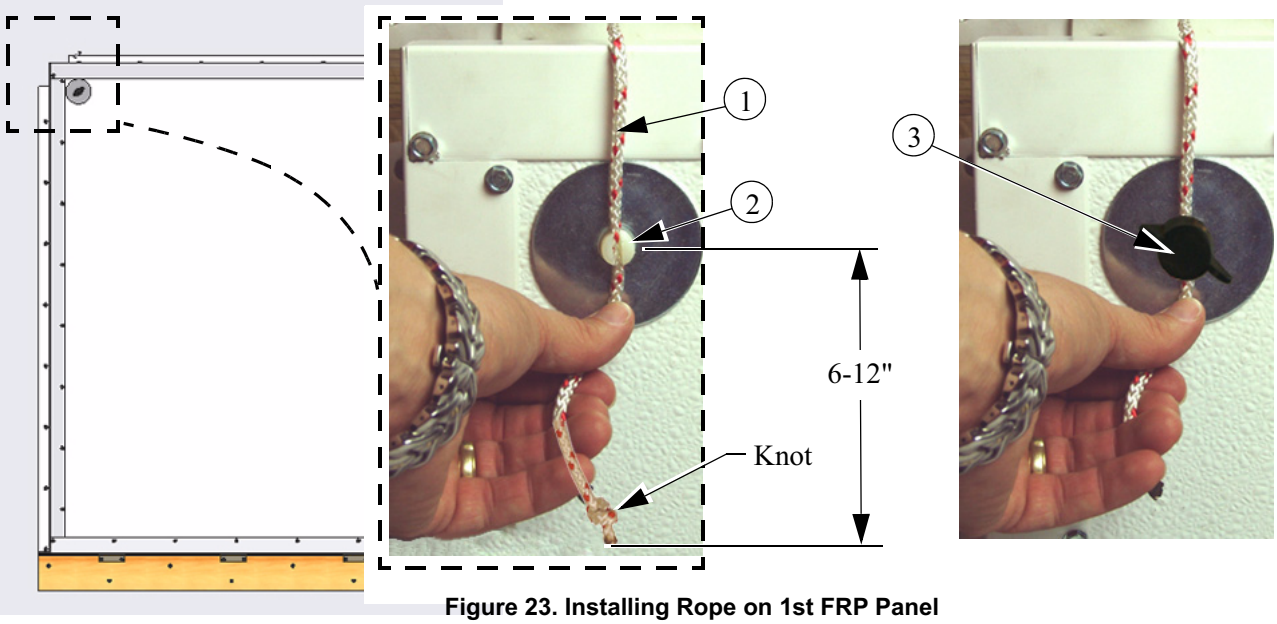

Figure 23. Installing Rope on 1st FRP Panel

Install an Eyehook **(Item 1, Figure 24)** 3/4" above the top edge of the Top C-Channel **(Item 2)** (*measure with the door closed)*. Screw the Eyehook in until the open end is nearly touching the wall. If the Winch operating the Tunnel Doors is going to be pulling from the left, turn the hook to a 45° angle to the Door **(See Figure 24)**. If the Winch is to located at the right end of the system, then the Eyehook should be at a 135° angle **(See Figure 25)**.

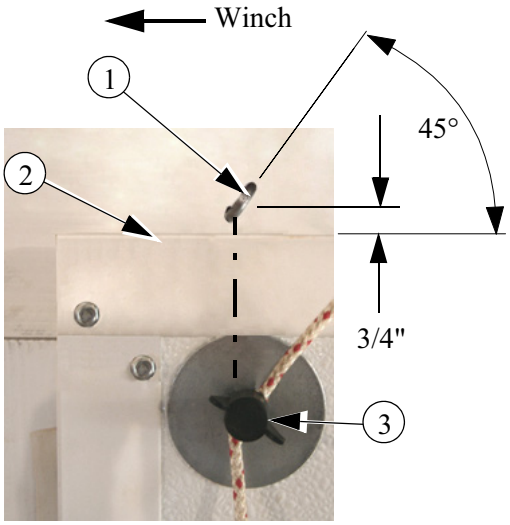

Figure 24. Eyehook for Tunnel Doors with Winch to the left

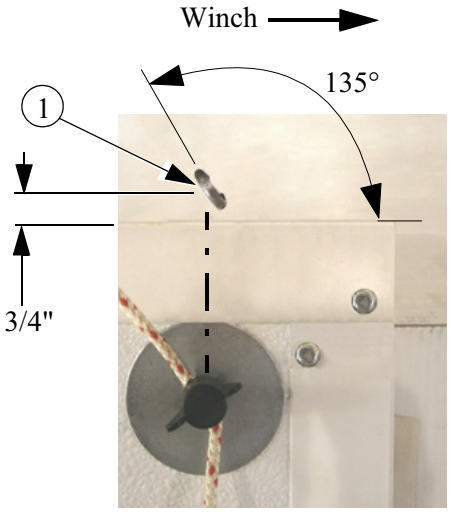

Figure 25. Eyehook for Tunnel Doors with Winch to the right

Item	Description
1	Eyehook
2	Top C-Channel

Make sure that Eyehook is in Solid Wood

Make sure that the Eyehook is in solid wood because it will be supporting a substantial amount of weight. If the Eyehook **(Item 1, Figure 26)** does not line up with a Wall Stud, angle the Eyehook down into the Door Header **as shown**, making sure that the center of the Eyehook ***when it is screwed in*** is 3/4" above the top of the Top C-Channel **(Item 2)**. If the Winch is located at the left of the system, turn the hook to a 45° angle to the Door **(See Figure 24)**. If the Winch is to located at the right end of the system, then the Eyehook should be at a 135° angle **(See Figure 25)**.

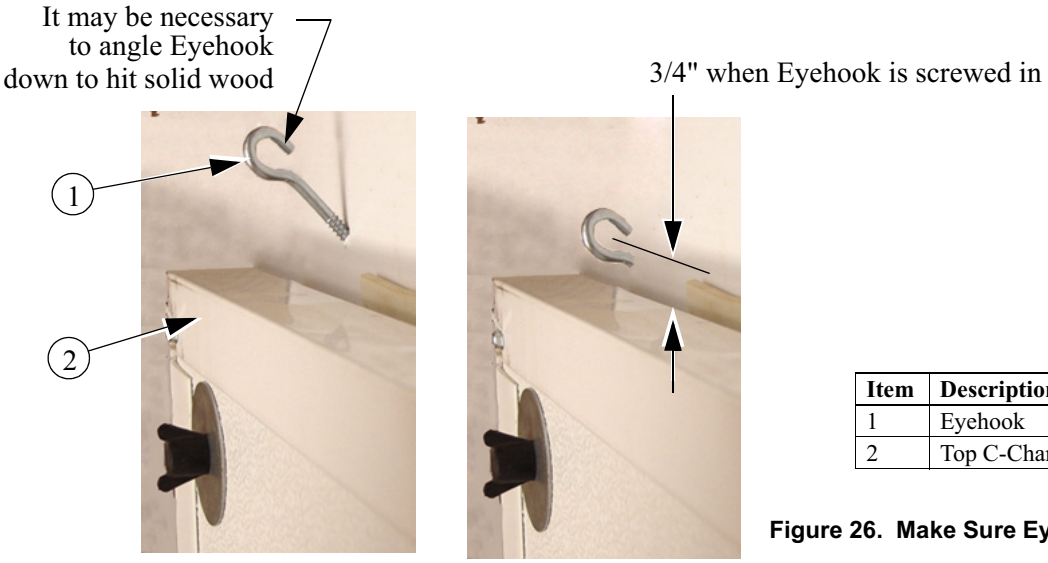

Item	Description
1	Eyehook
2	Top C-Channel

Figure 26. Make Sure Eyehook is in solid wood

Use a pair of Adjustable Pliers to squeeze the Eyehook closed **(See Figure 27)**. Insert the loose end of the Nylon Rope through the Eyehook and with the Doors open approximately 6", tie a temporary knot to support the Doors. **(See Figure 27)**

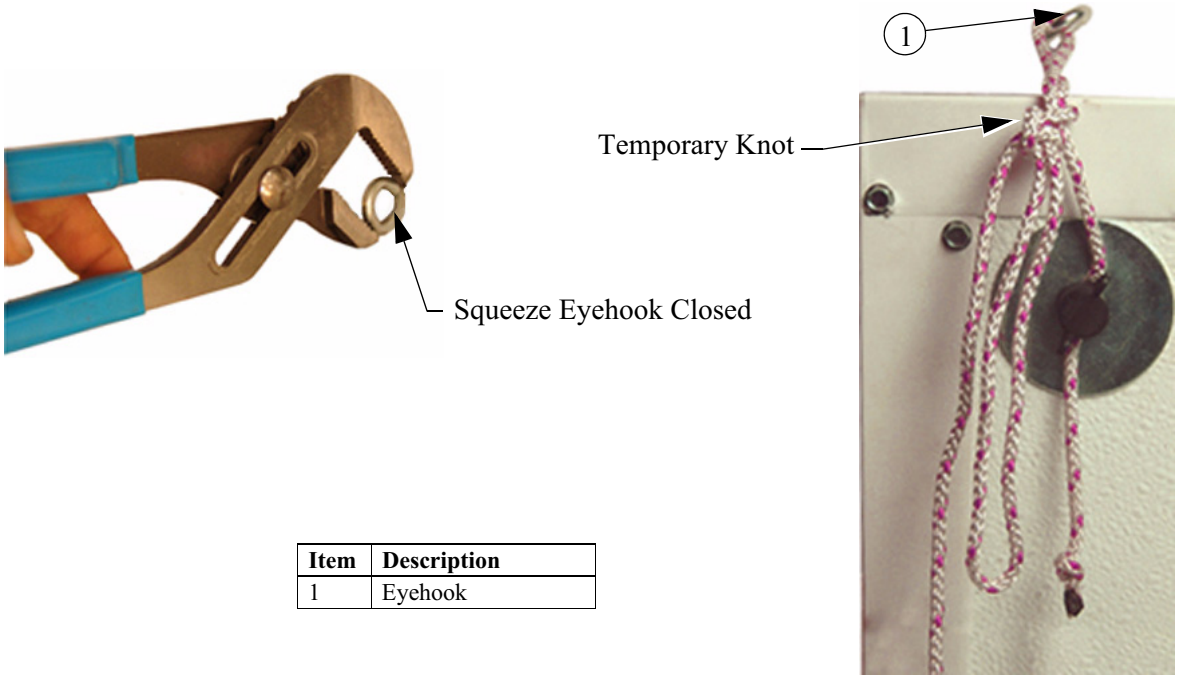

Item	Description
1	Eyehook

Figure 27. Squeeze Eyehook and tying Nylon Rope

Installing Nylon Rope at remaining Hole locations (Pre-assembled Door application only)

If installing continuous Doors skip to next page "Continuing to add FRP Panels and Temporary Tie-ups"

Install Large Flat Washers, Nylon Split Bolts **(Item 3, Figure 28)**, 6' Nylon Ropes **(Item 4),** Split Bolt Caps **(Item 5),** and Eyebolts **(Item 6)** at each hole as done in **Figures 22, and 23**. At this time, thread the Nylon Ropes through the Eyehooks and let them hang loose.

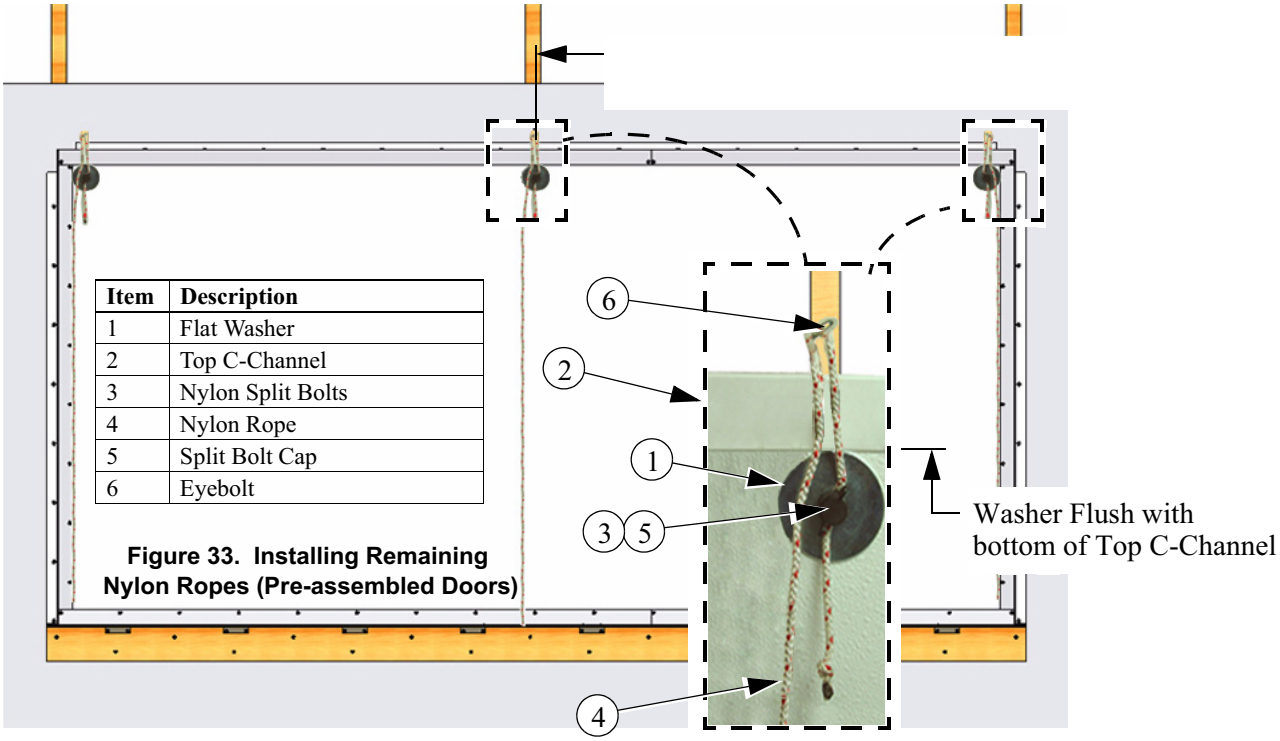

Item	Description
1	Flat Washer
2	Top C-Channel
3	Nylon Split Bolts
4	Nylon Rope
5	Split Bolt Cap
6	Eyebolt

Figure 33. Installing Remaining Nylon Ropes (Pre-assembled Doors)

Figure 28. Installing Nylon Rope (Pre-assembled Doors)

Skip to the "Installing Control Wire Eyehooks" section on page 26 to continue installation of Pre-assembled Doors.

Continuing to add FRP Panels and Temporary Tie-ups

Important: As more FRP Panels are added to the Door Assembly the Doors will become heavy. Make sure that you read the following directions very carefully for tying up the Doors to avoid injury and damage to the Tunnel Doors.

Continue to add on FRP Panels, C-Channels, H-Channels, and C-Channels with Hinges as you did in **Figures 5 through 19**. As you continue, the Tunnel Doors need to be tied up at least every 30' to allow for easy assembly, and to avoid having the Doors open suddenly causing damage to the Doors or injury. If the Tunnel Doors are going to be left un-attended during assembly, do not leave more than 30ft between the last Tie-up and the end of Door Assembly.

Obtain a Flat Washer **(Item 1, Figure 29)** and while holding it flush with the Bottom of the Top C-Channel **(Item 2)**, and lined up with the center of the Wall Stud, mark and drill a 1/2" hole in the FRP Panel for a Nylon Split Bolt **(Item 3)** to be installed. Install a Nylon Split Bolt, Flat Washers, a Split Bolt Cap, **(Item 4),** an Eyehook, and use a 6' Nylon Rope **(Item 5)** to tie the Doors up exactly as you did in **Figures 23-27**.

Important: The Large Flat Washers are sharp on one side from the manufacturing process. To determine which side is sharp, run your thumb across the inside diameter of the Washer. The sharp side (burr side) must always face towards the FRP Panel or it will cut into the Nylon Rope and Nylon Nut.

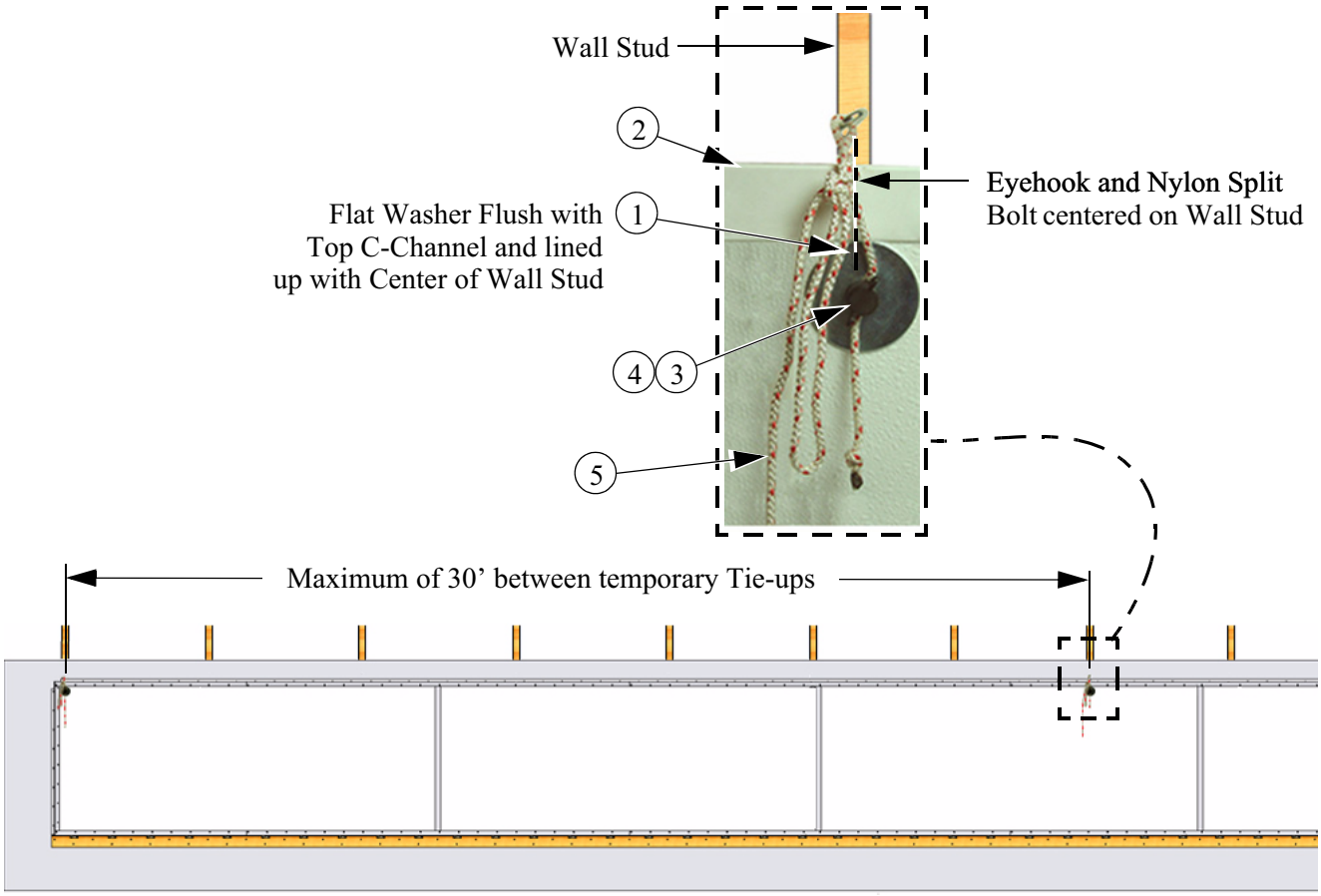

Item	Description
1	Large Flat Washer
2	Top C-Channel
3	Nylon Split Bolt
4	Split Bolt Cap
5	6' Nylon Rope

Figure 29. Temporary Tie-ups

Cutting off last FRP Panel

Once the end of the rough opening has been reached it may be necessary to cut off the last FRP Panel **(Item 1, Figure 30)**. Measure and Cut the FRP Panel so that it is Flush with the outside of the bulb of the White P-Seal **(Item 2)**.

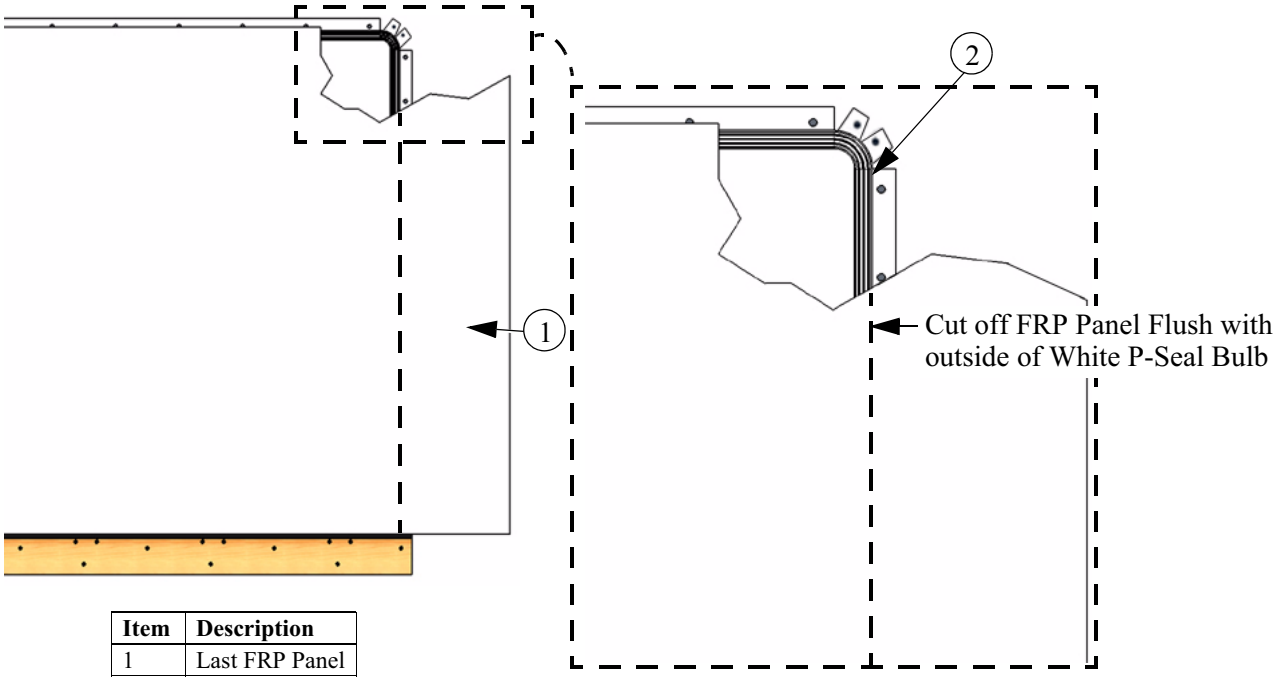

Item	Description
1	Last FRP Panel
2	White P-Seal

Figure 30. Cutting off last FRP Panel

Attaching the End C-Channel, Top C-Channel and Bottom C-Channel with Hinges to the Last FRP Panel

Obtain the 5’ Top C-Channel **(Item 1, Figure 31)** and 5’ C-Channel w/hinges that you cut earlier and attach them to the last FRP Panel with Self-Tapping Screws spaced every 6". It may be necessary to cut the C-Channels so that they are flush with the end of the Last FRP Panel. Obtain the second 48-1/4 piece of End C-Channel **(Item 3)** cut earlier in **Figure 12** and attach it with Self-Tapping Screws exactly the same as the End C-Channel at the beginning of the Tunnel Door run **(See Figure 13)**.

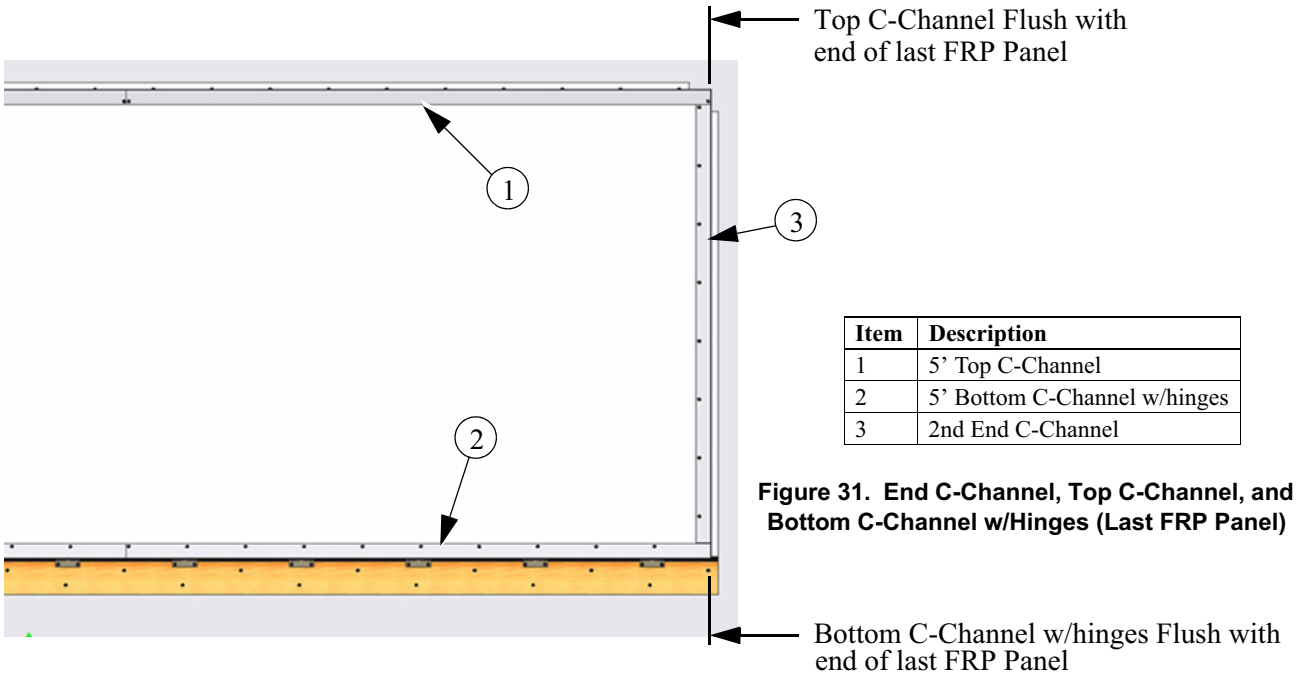

Item	Description
1	5’ Top C-Channel
2	5’ Bottom C-Channel w/hinges
3	2nd End C-Channel

Figure 31. End C-Channel, Top C-Channel, and Bottom C-Channel w/Hinges (Last FRP Panel)

Installing Flat Washers & Nylon Split Bolt on the Last FRP Panel

Obtain a Large Flat Washer **(Item 1, Figure 32)** and a marking utensil. Place the Large Flat Washer in the upper most corner of the end of the last FRP Panel **(Item 2)** so that it is Flush with the End Channel **(Item 3)** and the Top C-Channel **(Item 4)** and mark the center point of the washer. Drill a 1/2" Hole through the FRP Panel at the Center mark you just made **(See Figure 33)**. Install two Flat Washers, a Nylon Split Bolt and a Split Bolt Cap exactly the same as you did in **Figures 20-22**.

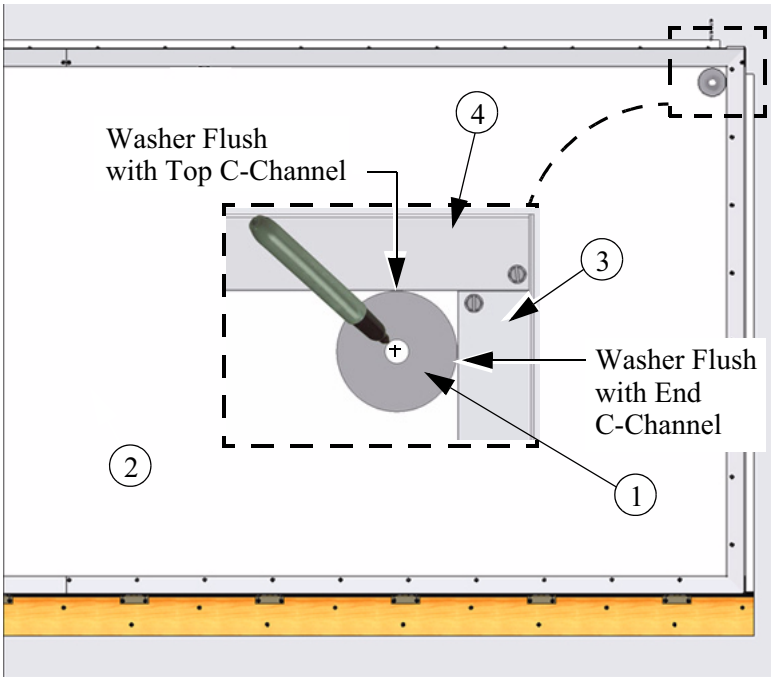

Figure 32. Marking center point for hole in Last FRP Panel

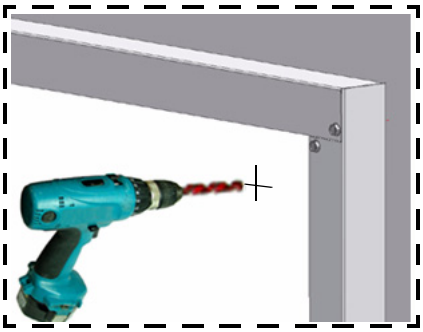

Figure 33. Drilling 1/2" hole in Last FRP Panel

Item	Description
1	Large Flat Washer
2	Last FRP Panel
3	End C-Channel
4	Top C-Channel

Installing remaining Nylon Ropes

Nylon ropes need to be attached to the FRP Panels at every Wall Stud throughout the entire length of Tunnel Doors (except where the Doors were previously tied up). Obtain Flat Washers **(Item 1, Figure 34)** and while holding them flush with the Bottom of the Top C-Channel **(Item 2)**, and lined up with the center of each Wall Stud, mark and drill a 1/2" holes in the FRP Panels for Nylon Split Bolts **(Item 3)** to be installed just like you did in **Figures 20, and 21**. Install Large Flat Washers, Nylon Split Bolts, 6' Nylon Ropes **(Item 4)** and Split Bolt Caps **(Item 5)** at each hole as done in **Figures 22, and 23**. At this time, thread the Nylon Ropes through the Eyehooks and let them hang loose.

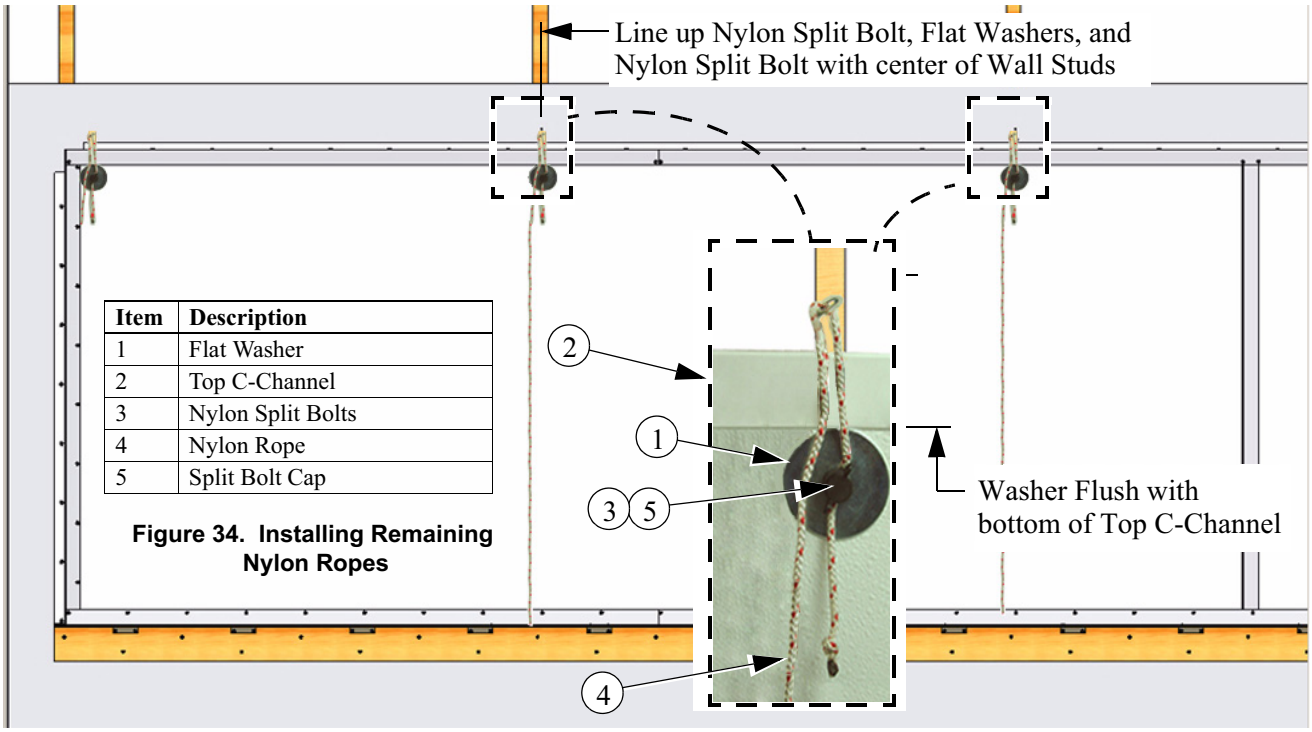

Item	Description
1	Flat Washer
2	Top C-Channel
3	Nylon Split Bolts
4	Nylon Rope
5	Split Bolt Cap

Figure 34. Installing Remaining Nylon Ropes

Control Wire Eyehooks

At the center of every Wall Stud, screw in a second Eyehook **(Item 1, Figure 35)** 3/4" above the first, but only screw it in to the end of the threads. This Eyehook will be used to run Control Wire through horizontally, so leave it at 90° to the Top C-Channel **(Item 2)** with the open end of the Eyehook up **as shown**.

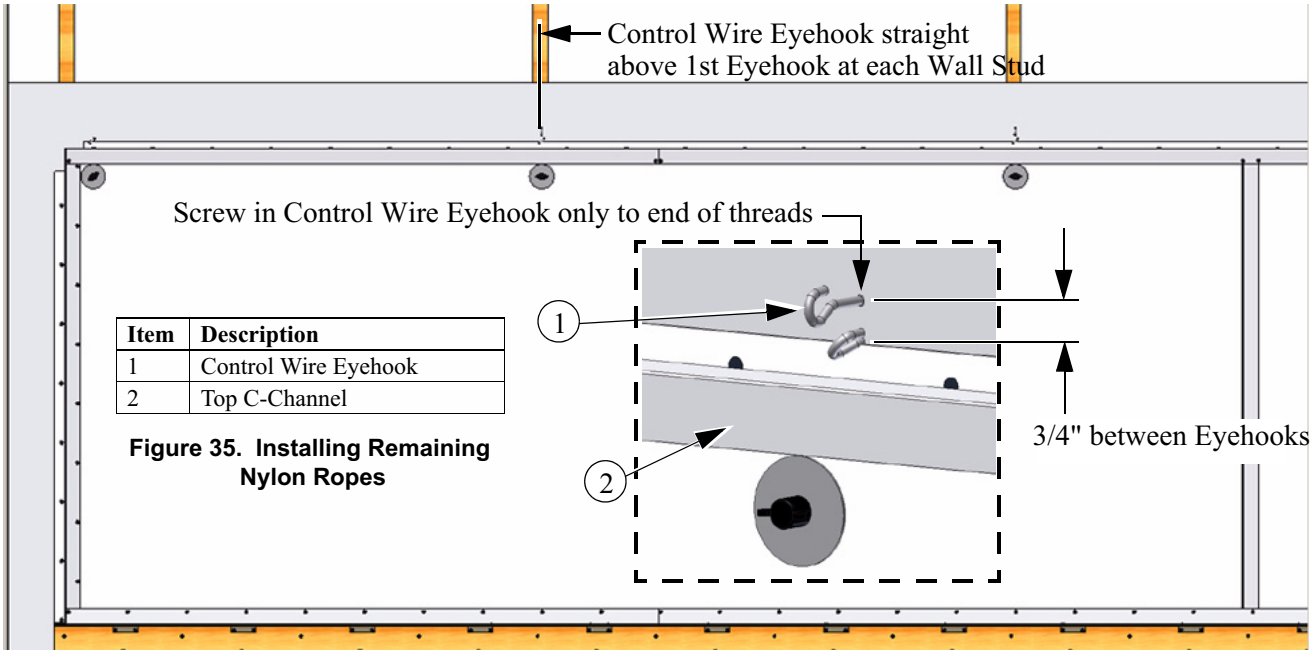

Item	Description
1	Control Wire Eyehook
2	Top C-Channel

Figure 35. Installing Remaining Nylon Ropes

Control Wire Installation

At the Winch end of the Tunnel Doors, have someone hold and unroll the Roll of Control Wire **(Item 1, Figure 36)** while a second person feeds it through the Control Wire Eyehooks **(Item 2)**. It is very important to not let the Control Wire get any bends or kinks in it. Cut off the Control Wire with a minimum of 5' extra at each end of the Tunnel Door run and put a 90° bend in the wire 1/2" from both ends **(See Figure below)**

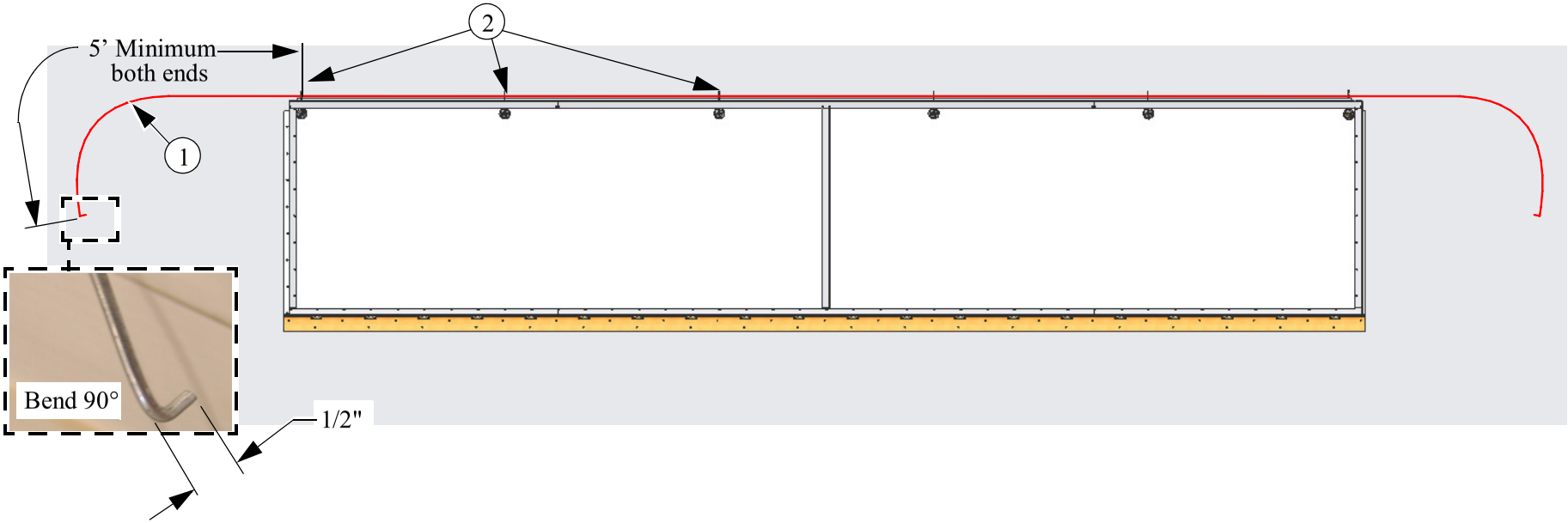

Item	Description
1	1st Eyehook
2	.125 Cable Clamp
3	Winch Cable
4	Control Wire

Figure 36. Control Wire Installation

Attaching Control Wire to Cable (Winch End)

It would be impossible to show every way to cable the Tunnel Doors. Shown below is one way using a Linear Lift, Double-Back Pulleys, and a Hand Winch mounted on the end wall. The Winch is pulling from the right in the Side Wall View. There must be a distance equal to or greater than the *desired Tunnel Door actuation* between the 1st Eyehook **(Item 1)** and the 1st Cable Clamp **(Item 2)** connecting the Winch Cable **(Item 3)** to the Control Wire **(Item 4)**. Use four Cable Clamps rotated 180° to each other exactly as shown in **Figure 37** below.

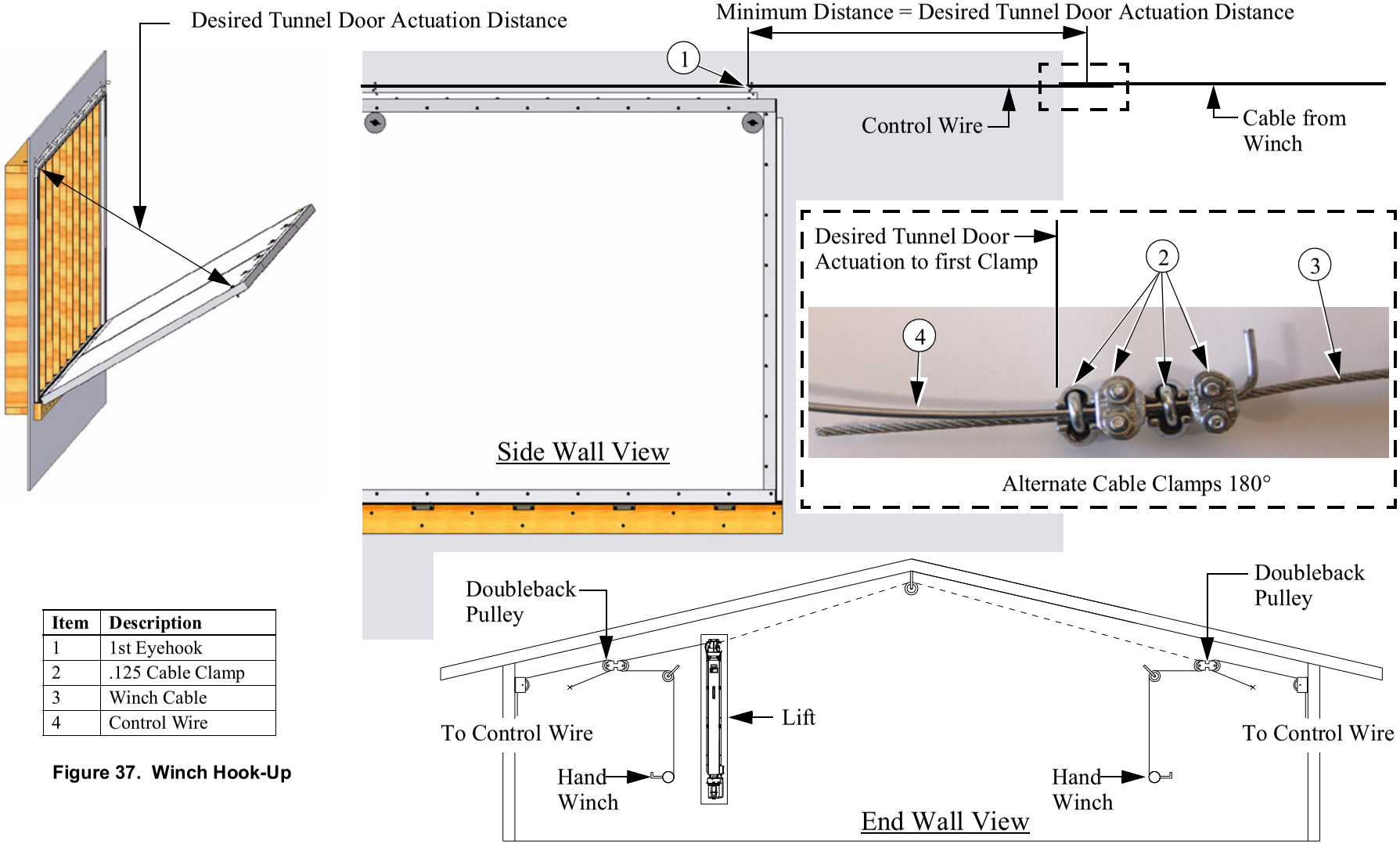

Item	Description
1	1st Eyehook
2	.125 Cable Clamp
3	Winch Cable
4	Control Wire

Figure 37. Winch Hook-Up

Installing Counter Weight (Concrete Block)

Now that the Control Wire is attached to the Winch Cable it is time to install a counterweight at the other end of the Tunnel Door run. Run the Linear Lift to the fully open position (Brass Nut **(Item 1)** opposite the Motor end, if using a Chore Time Linear-Lift™) **(See Figure 38 below)**. There must be a distance atleast 1" greater than the *desired Tunnel Door actuation* between the last Eyehook **(Item 2)** and the 1st Cable Clamp **(Item 3)** connecting the Control Wire **(Item 4)** to the Counterweight Cable **(Item 5)** Mount the 1st pulley a minimum of 49" for 4' desired actuation and 61" for 5' desired actuation away from the last Eyehook to allow full actuation of the Control Wire. Use pulleys to get the cable elevated high enough to allow for: Desired Tunnel Door actuation, plus the height of the Counterweight (Concrete Block), plus 2' to keep the Counterweight above Chickens **(See Figure 38).** Set the Counterweight on something to elevate it just above Chicken height and attach a cable to it. Thread the cable up through the pulleys and use four Cable Clamps rotated 180° to each other to attach the end of the Counterweight Cable to the Control Wire as close to the 1st Pulley as possible. Use the Hand Winch to tighten up the Control Wire and then check to make sure there is still the distance for actuation between the last Eyehook and the 1st Cable Clamp.

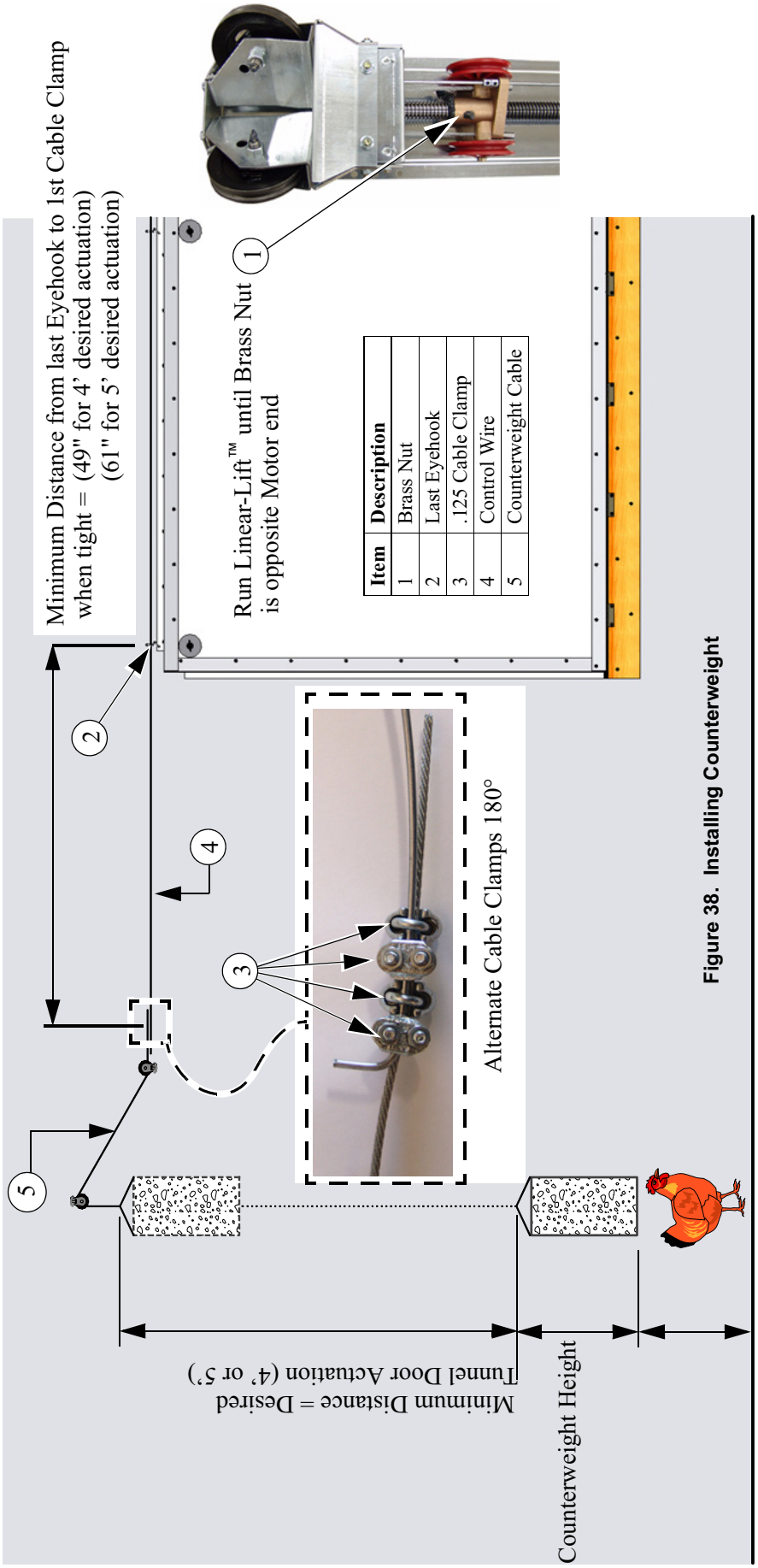

Item	Description
1	Brass Nut
2	Last Eyehook
3	.125 Cable Clamp
4	Control Wire
5	Counterweight Cable

Figure 38. Installing Counterweight

Installing Counter Weight (Spring)

A Tension Spring may be used instead of a counterweight if desired. Shown below is a Tension Spring (**Item 1, Figure 39**) (CT Part No. 47958) mounted to the wall with Pulley Brackets **(Item 2)** (CT Part No. 35405), U-Bolt **(Item 3)** (CT Part No. 35602), and a Pulley **(Item 4)** (CT Part No. 2500). Run the Linear Lift to the fully open position (Brass Nut **(Item 5)** ***opposite*** the Motor end, if using a Chore Time Linear-Lift™) **(See Figure 39 below)**. Mount the Tension Spring with the minimum distance requirements shown below. Attach the Counterweight Cable **(Item 6)** **(*not included*)** to the Control Wire **(Item 7)** with four Cable Clamps **(Item 8)** rotated 180° from each other as shown. Use the Hand Winch to tighten the Control Wire until the Tension Spring is stretched to 43" in length. Make sure that there is still the minimum distance (49" for 4' desired actuation, or 61" for 5' desired actuation) between the Last Eyehook **(Item 9)** and the 1st Cable Clamp.

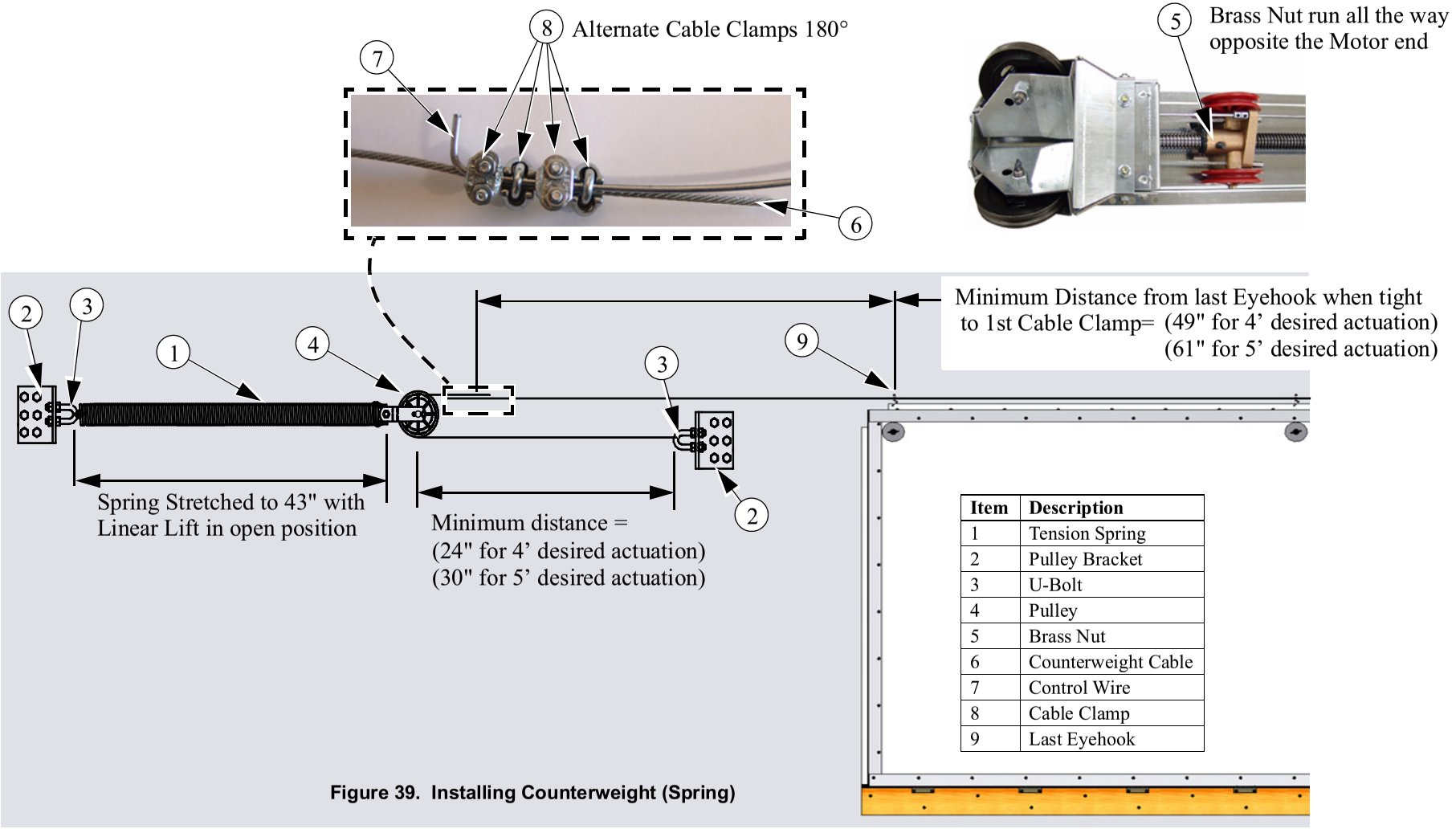

Item	Description
1	Tension Spring
2	Pulley Bracket
3	U-Bolt
4	Pulley
5	Brass Nut
6	Counterweight Cable
7	Control Wire
8	Cable Clamp
9	Last Eyehook

Figure 39. Installing Counterweight (Spring)

Attaching Nylon Ropes to Control Wire

Run the Winch all the way to the closed position (Brass Nut **(Item 1, Figure 40)** toward the Motor end, if using a Chore Time Linear-Lift™). Now it is time to attach Nylon Ropes to the Control Wire **(Item 2)**. The Nylon Ropes support the weight of the Doors and control how far they actuate. Locate the 1st Nylon Rope **(Item 3)** on the FRP Panel that is opposite the Winch end and untie it if necessary. Thread the Rope through the Bottom Eyehook **(Item 4)** and over to the Second Control Wire Eyehook **(Item 5)**. It may be necessary to loosen the Split Bolt Cap. If the measurement between these Eyehooks is not atleast equal to the desired Tunnel Door actuation (48" or 60") see **Figure 41** on the following page. Tie a knot **(Item 6)** in the end of the Nylon Rope. Use a Cable Clamp **(Item 7)** to attach the Nylon Rope to the Control Wire as close to the Control Wire Eyehook as possible. Make sure that the Nylon Rope creates a straight line and is not looped over or around the Control Wire. Orient the Cable Clamp exactly as shown in **Figure 40** for proper bite into the Control Wire. It is very important to get the Cable Clamp Nuts tight as they are required to support the weight of the Tunnel Doors. Attach the rest of the Nylon Ropes throughout the entire Tunnel Door run in the same manner.

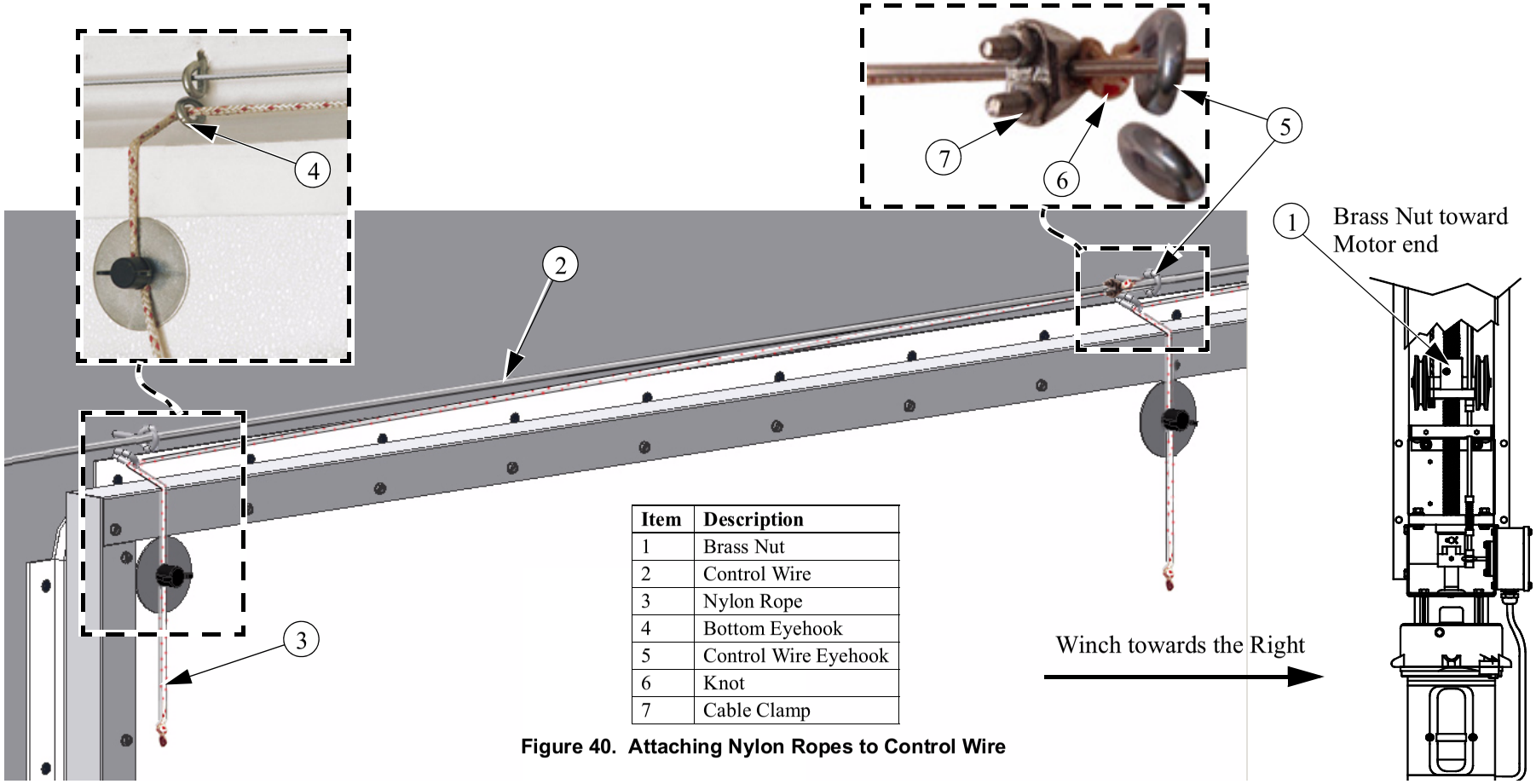

Item	Description
1	Brass Nut
2	Control Wire
3	Nylon Rope
4	Bottom Eyehook
5	Control Wire Eyehook
6	Knot
7	Cable Clamp

Figure 40. Attaching Nylon Ropes to Control Wire

Attaching Nylon Ropes to Control Wire (if there is less than desired actuation distance between Control Wire Eyehooks)

Run the Winch all the way to the closed position (Brass Nut **(Item 1, Figure 41)** toward the Motor end, if using a Chore Time Linear-Lift™). If the distance between Control Eyehook 1 and Control Eyehook 2 is less than the desired Tunnel Door actuation **(See Figure)**, then the following instructions apply. Cut a piece of Nylon rope 2x desired actuation +2' (5' actuation = 12' rope). Tie Knots at each end of the Nylon Rope. Replace the shorter Nylon Rope attached to the 1st Nylon Split Bolt **(Item 4)** in the Corner of the 1st FRP Panel earlier. Thread the new, longer Nylon Rope **(Item 5)** through the 1st Bottom Eyehook **(Item 6)**, then through the 2nd Bottom Eyehook **(Item 7),** and allow the rope to hang. Thread the 2nd shorter Nylon rope attached to the FRP Panel through the Bottom Eyehook above it and tie a knot at the end of it. Take both the longer Nylon Rope and the shorter Nylon Rope and attach them to the Control Wire with a Cable Clamp **(Item 8)** as close to the 3rd Control Wire Eyehook **(Item 9)** as possible. Make sure that the Nylon Ropes create straight lines and are not looped over or around the Control Wire when tight. Orient the Cable Clamp exactly as shown in **Figure 41** for proper bite into the Control Wire. It is very important to get the Cable Clamp Nuts tight because they will be supporting a substantial amount of weight. Loosen both the 1st and 2nd Split Bolt Caps and pull down on both Nylon Ropes as hard as you can to pull the Doors tight against the seal. Re-tighten the Split Bolt Caps. To attach the Nylon Ropes to the Control Wire when spacing between Control Wire Eyehooks is equal to the desired Tunnel Door actuation see **Figure 40** on the previous page.

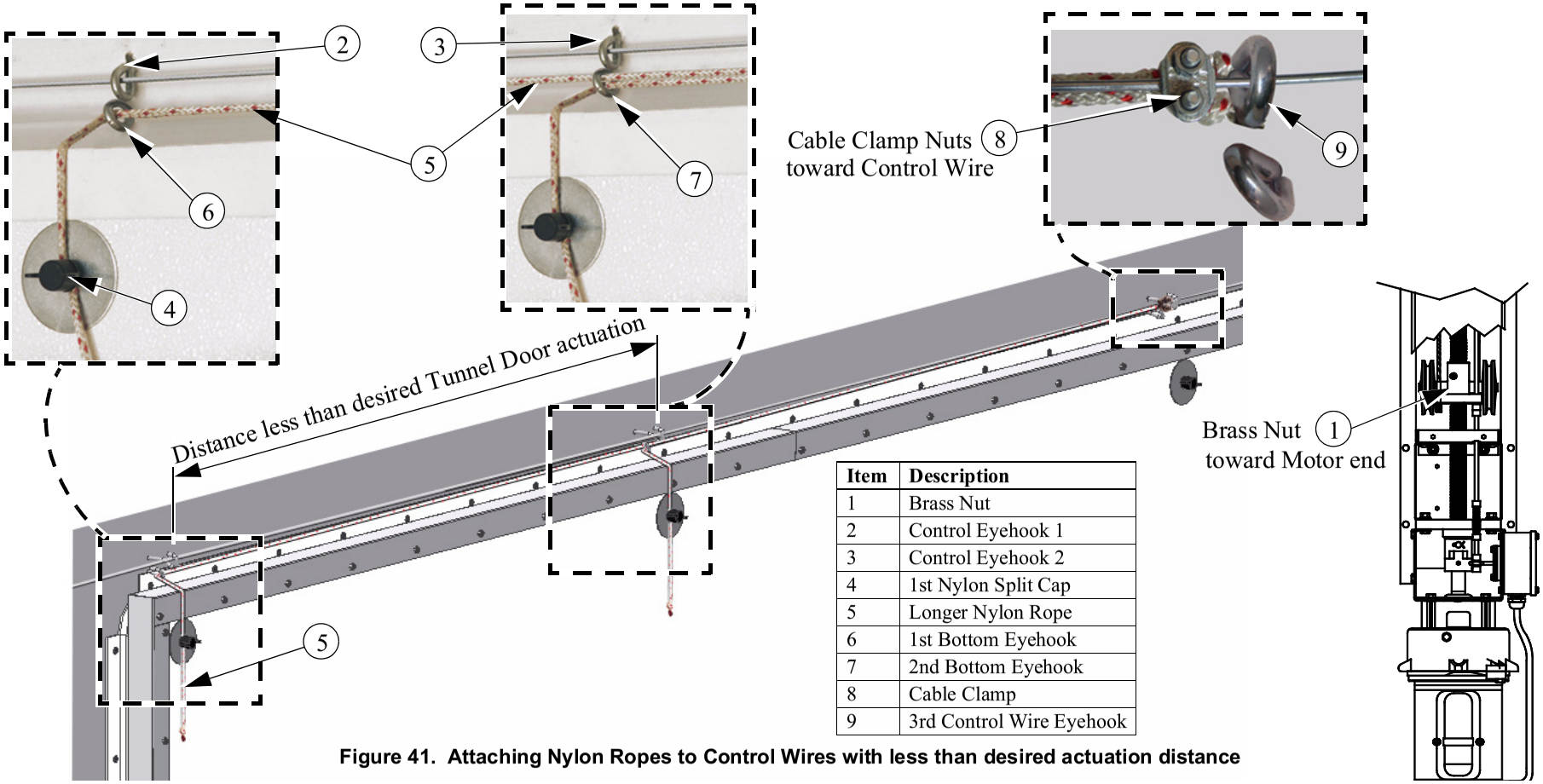

Item	Description
1	Brass Nut
2	Control Eyehook 1
3	Control Eyehook 2
4	1st Nylon Split Cap
5	Longer Nylon Rope
6	1st Bottom Eyehook
7	2nd Bottom Eyehook
8	Cable Clamp
9	3rd Control Wire Eyehook

Figure 41. Attaching Nylon Ropes to Control Wires with less than desired actuation distance

Attaching Nylon Ropes to Control Wire (if there is less than desired actuation distance between Control Wire Eyehooks and also less than desired actuation distance to the wall)

Run the Winch all the way to the closed position (Brass Nut **(Item 1, Figure 40)** toward the Motor end, if using a Chore Time Linear-Lift™). If the distance between the last two Control Eyehooks is less than the desired Tunnel Door actuation, and there is less than the desired actuation distance between the last Bottom Eyehook and the wall **(See Figure 42)**, then the following instructions apply. Attach two Pulleys **(Item 1)** (Chore-Time part no. 44577) left of the 3rd Control Eyehook from the end **(Item 2)** with a Lag Screw **(Item 3)** and Washers used for spacers **(Item 4) as shown**. Cut two pieces of Nylon rope 2x desired actuation +2' (5' actuation = 12' rope). Tie Knots at the ends of both Nylon Ropes. Replace both the 2nd to last and last Nylon Ropes attached earlier with the new Longer ones **(Item 5)**. Thread both longer ropes through the Lower Eyehooks above them, around the Pulleys and let it hang temporarily. Turn the 3rd lower Eyehook from the end **(Item 6)** 90° as shown. Thread the 3rd Nylon rope from the end **(Item 7)** through the lower Eyehook above it and use a Cable Clamp **(Item 8)** to attach it ***and*** the two new Longer Ropes to the Control Wire, as close to the 2nd Control Wire Eyehook from the end **(Item 9)** as possible **(See Figure)**.

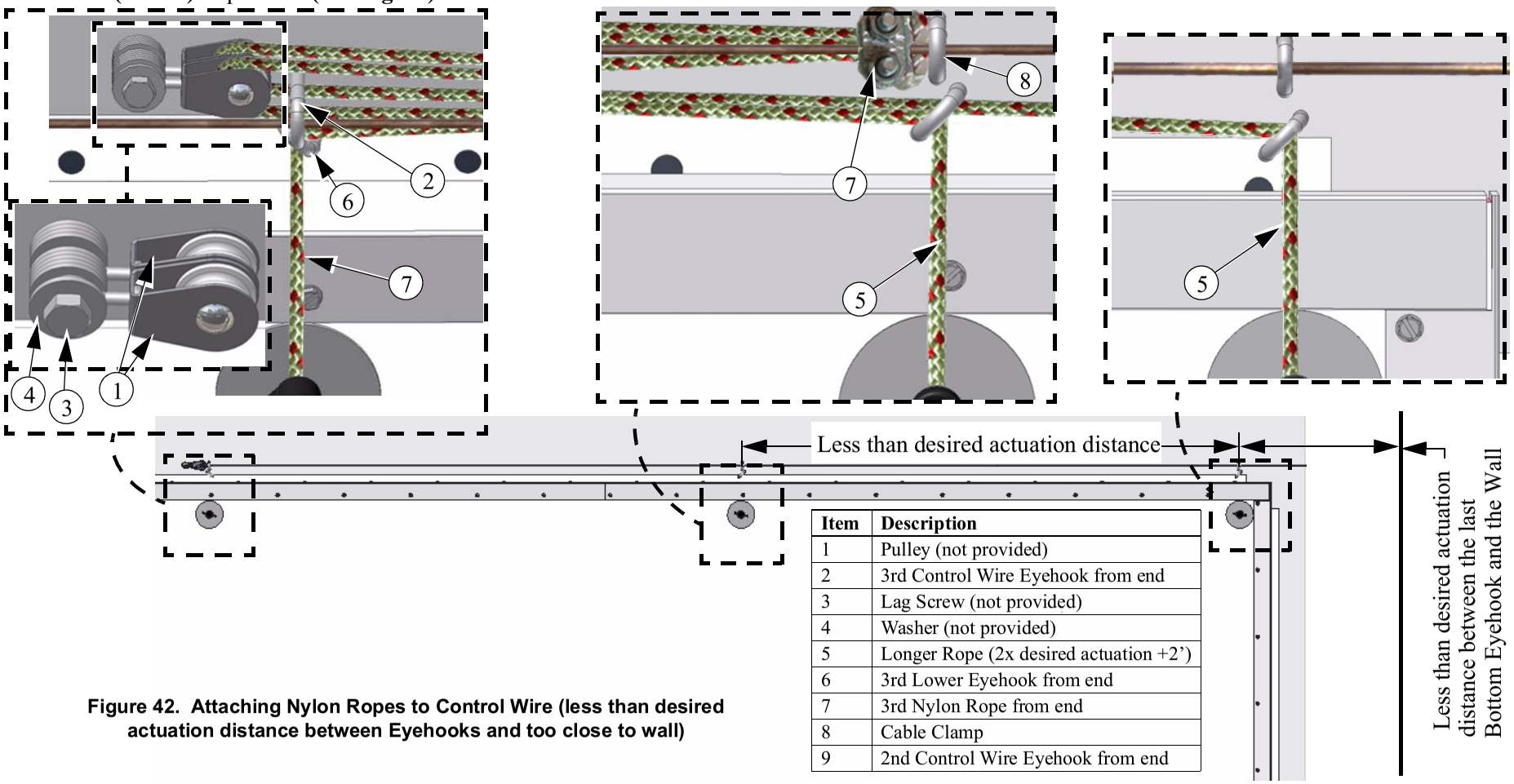

Item	Description
1	Pulley (not provided)
2	3rd Control Wire Eyehook from end
3	Lag Screw (not provided)
4	Washer (not provided)
5	Longer Rope (2x desired actuation +2')
6	3rd Lower Eyehook from end
7	3rd Nylon Rope from end
8	Cable Clamp
9	2nd Control Wire Eyehook from end

Figure 42. Attaching Nylon Ropes to Control Wire (less than desired actuation distance between Eyehooks and too close to wall)

Tighten down Nylon Ropes and Final Adjustments

To insure a tight sealing Tunnel Door all of the Nylon Ropes need tightened down. Loosen the Nylon Split Bolt Caps **(Item 1, Figure 43)** and pull down on the Nylon Ropes **(Item 2)** as hard as you can; then re-tighten the Nylon Split Bolt Caps. The White P-Seal **(Item 3)** should be compressed and there should be no daylight showing across the top of the Doors. We recommend that you use Vice Grips **(Item 4)** to get a good hold on the Nylon Ropes and this will also be easier on your hands.

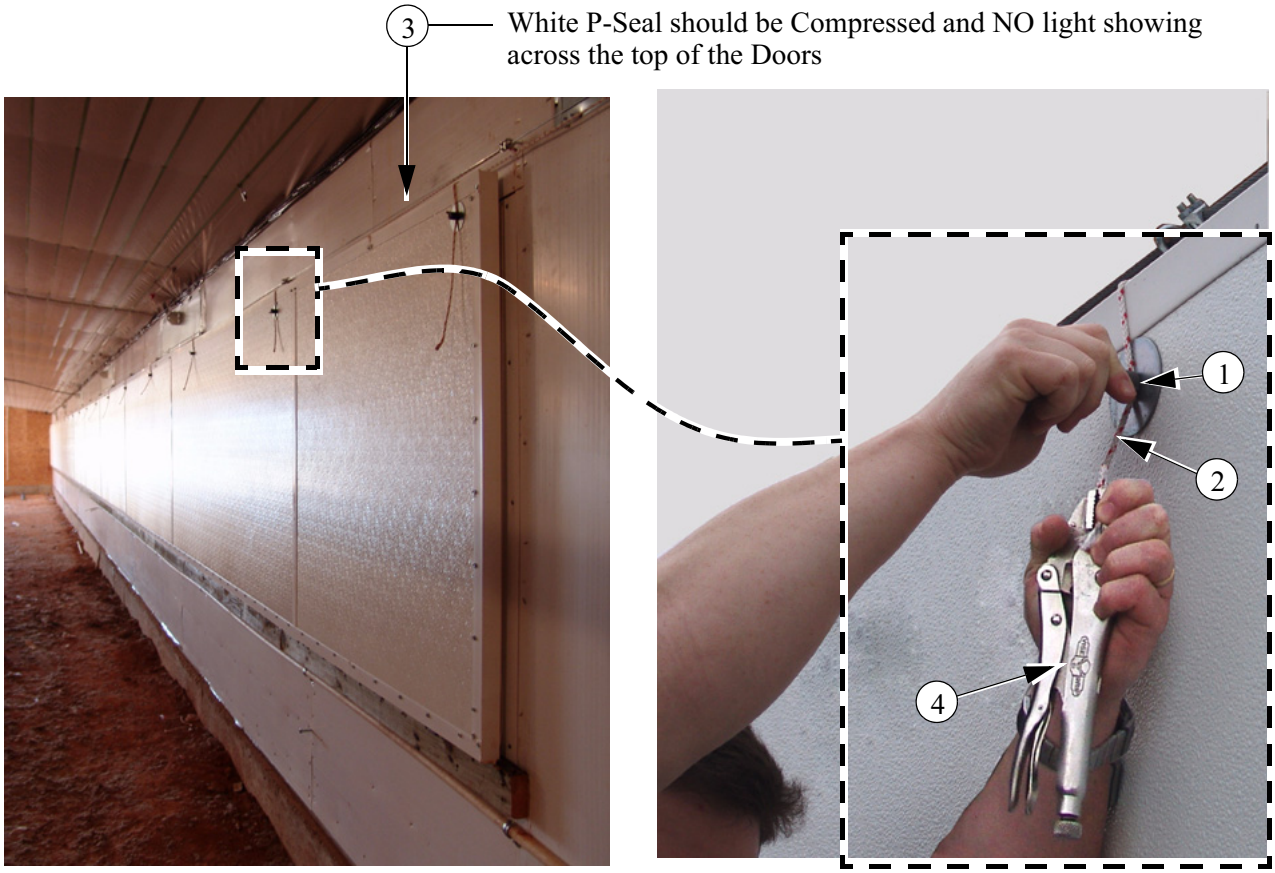

Item	Description
1	Nylon Split Bolt Cap
2	Nylon Rope
3	White P-Seal
4	Vice Grips

Figure 43. Tightening down Nylon Ropes

Caulking

In order to maximize proper Airflow of your new Tunnel Doors it is necessary to Caulk some of the cracks between the Channels. Use Silicone Caulk (preferably white) to caulk the cracks between the End C-Channel **(Item 1, Figure 44)** and the Top C-Channel **(Item 2)** at both ends of the system. Caulk between the H-Channel **(Item 3)** and the Top C-Channel. Caulk between the H-Channel and the Bottom C-Channel with Hinges **(Item 4)**.

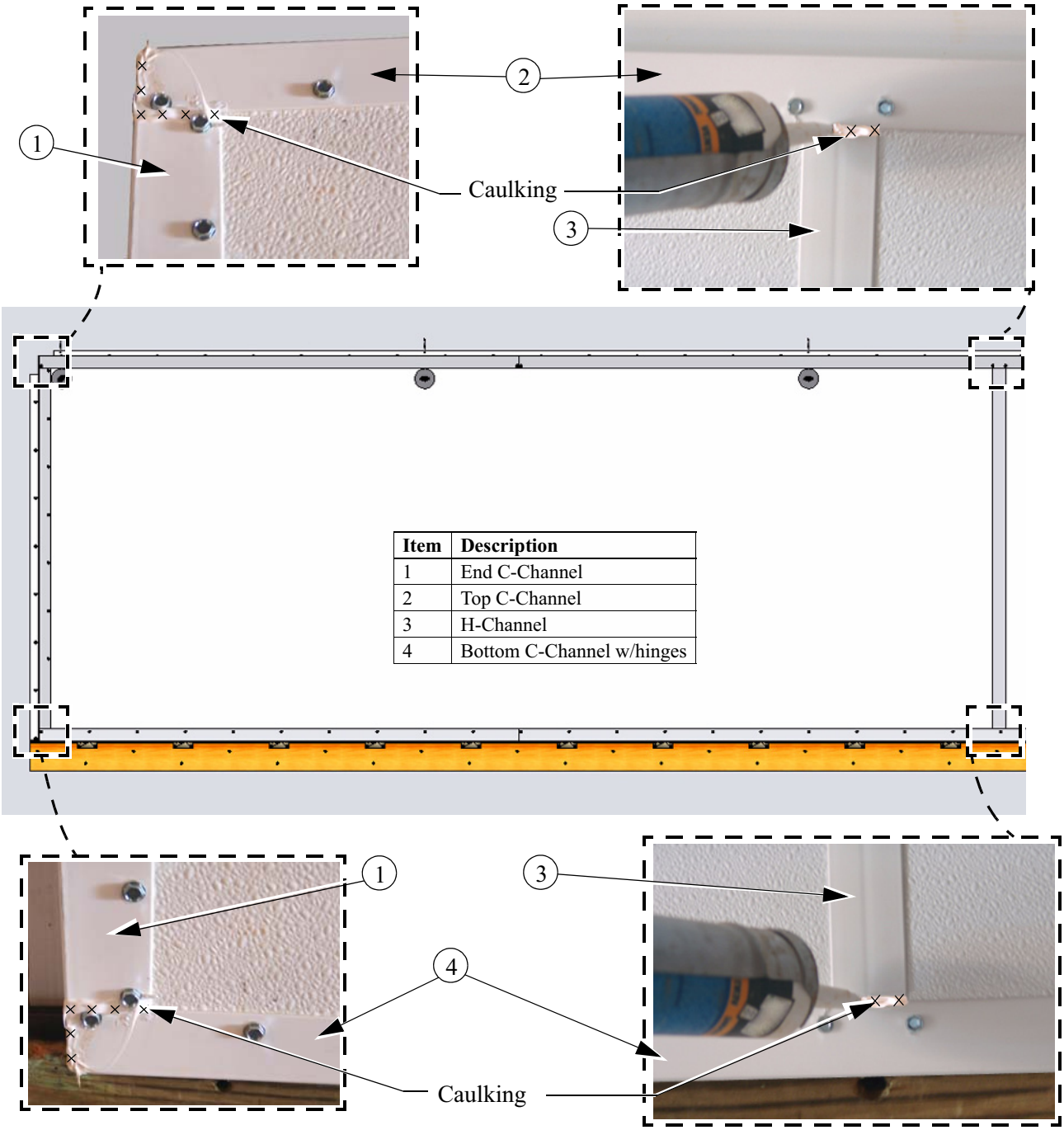

Item	Description
1	End C-Channel
2	Top C-Channel
3	H-Channel
4	Bottom C-Channel w/hinges

Figure 44. Caulking

Itemized Parts (Continuous Doors)

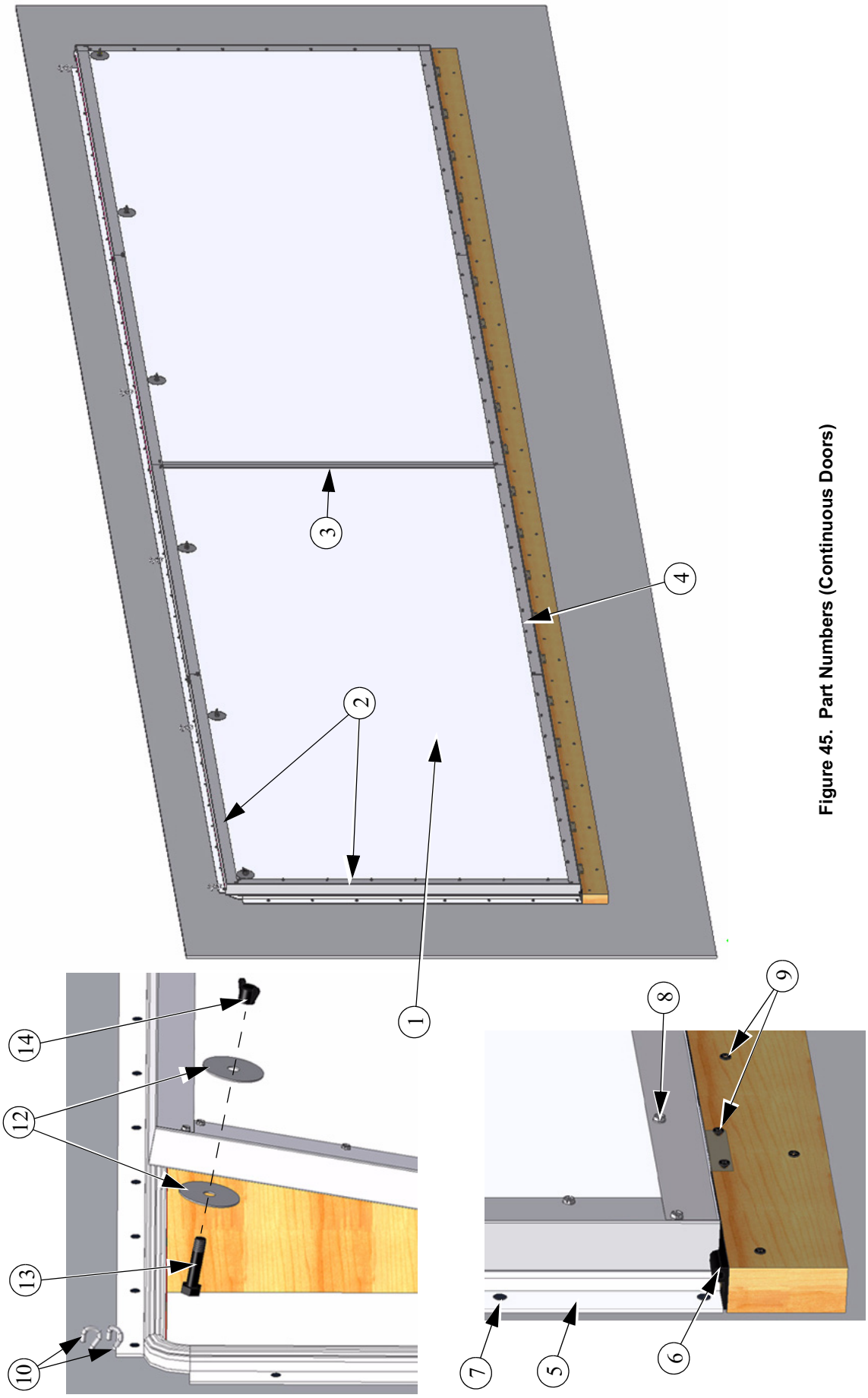

Figure 45. Part Numbers (Continuous Doors)

Part Numbers (Continuous Doors)

Item	Description	Part No.
1	4’ x 10’ FRP Panel	50225
2	10’ PVC C-Channel	50226-2
3	PVC H-Channel	50255-2
4	10’ Bottom Channel w/Hinges	50229
5	White P-Seal	50237
6	Black P-Seal	50238
7	2D x 1 Galv. Roofing Nail	50239
8	HXWH SFTP 10-16 x .63 Screw	6727
9	#9-9 x 3" Quad Drive Wood Screw	50241
10	Eyehook	1214
11	Nylon Rope (Not Shown)	5-37173
12	Large Flat Washer	50234
13	Nylon Split Bolt	50236
14	Split Bolt Cap	40788
15	Actuator Wire (500’ Roll) Not Shown	48530
16	.125 Cable Clamp (Not Shown)	14898

Itemized Parts and Part Numbers (Pre-assembled Doors)

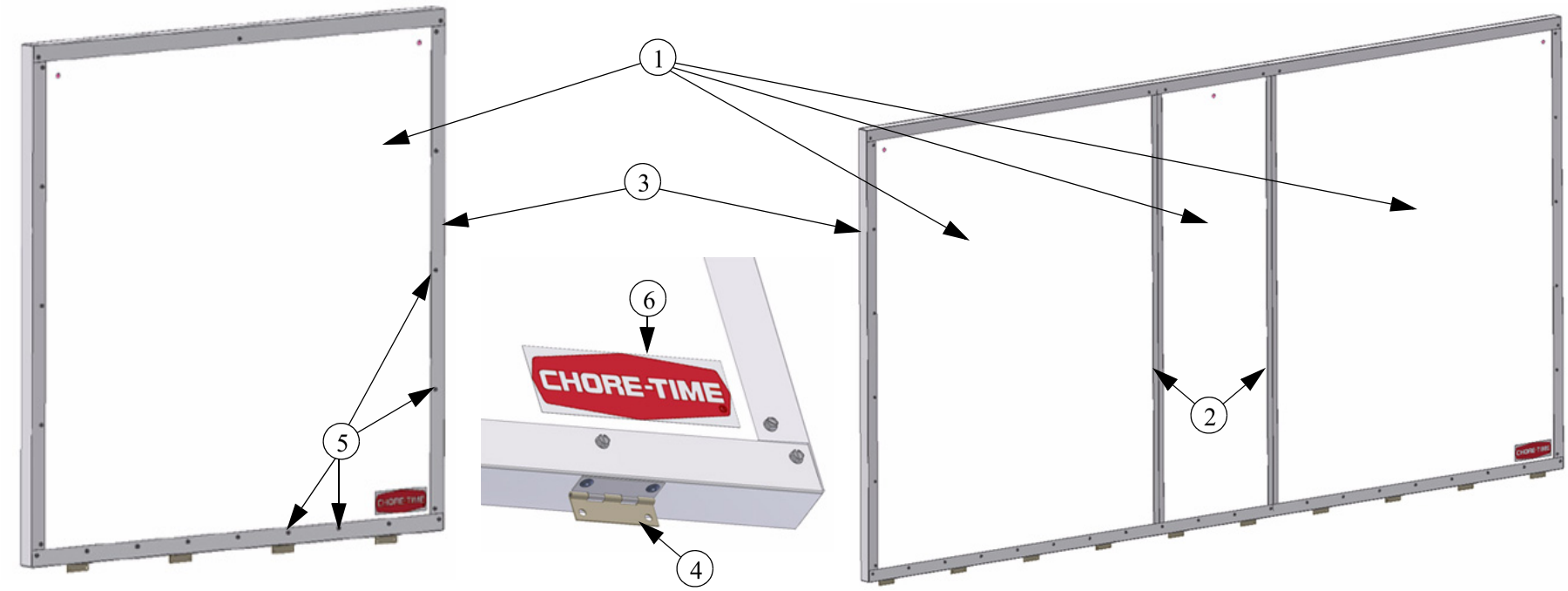

			Models					
			50810-1	50811-1	50812-1	50813-1	50814-1	50815-1
Item	Part No.	Description	QTY.*	QTY.*	QTY.*	QTY.*	QTY.*	QTY.*
1	50225	1.5 x 48 x 115 FRP Panel	--	--	1	--	--	--
	50225-1	1.5 x 48 x 96 FRP Panel	.5	1	--	--	--	--
	50225-2	1.5 x 60 x 48 FRP Panel	--	--	--	1	2	2.5
2	50226-1	96" PVC C-Channel	2	3	1	1	2	--
	50226-2	115" x 60" PVC C-Channel	--		1	1	1	3
3	ST11051	1.5 x 2.5 Hinge	4	8	10	4	8	20
4	4629	Pop Rivet .1875 x .250	8	16	20	8	16	40
5	149	.188 x .438 x .051 Washer	8	16	20	8	16	40
6	6727	HXWH SFTP 10-16 x .63 Screw	22	31	36	24	33	76
7	2525-4	Decal	1	1	1	1	1	1
8	50255-1	H-Channel	--	--	--	--	1	2

*Quantities shown are per Door.

Optional Parts Listing

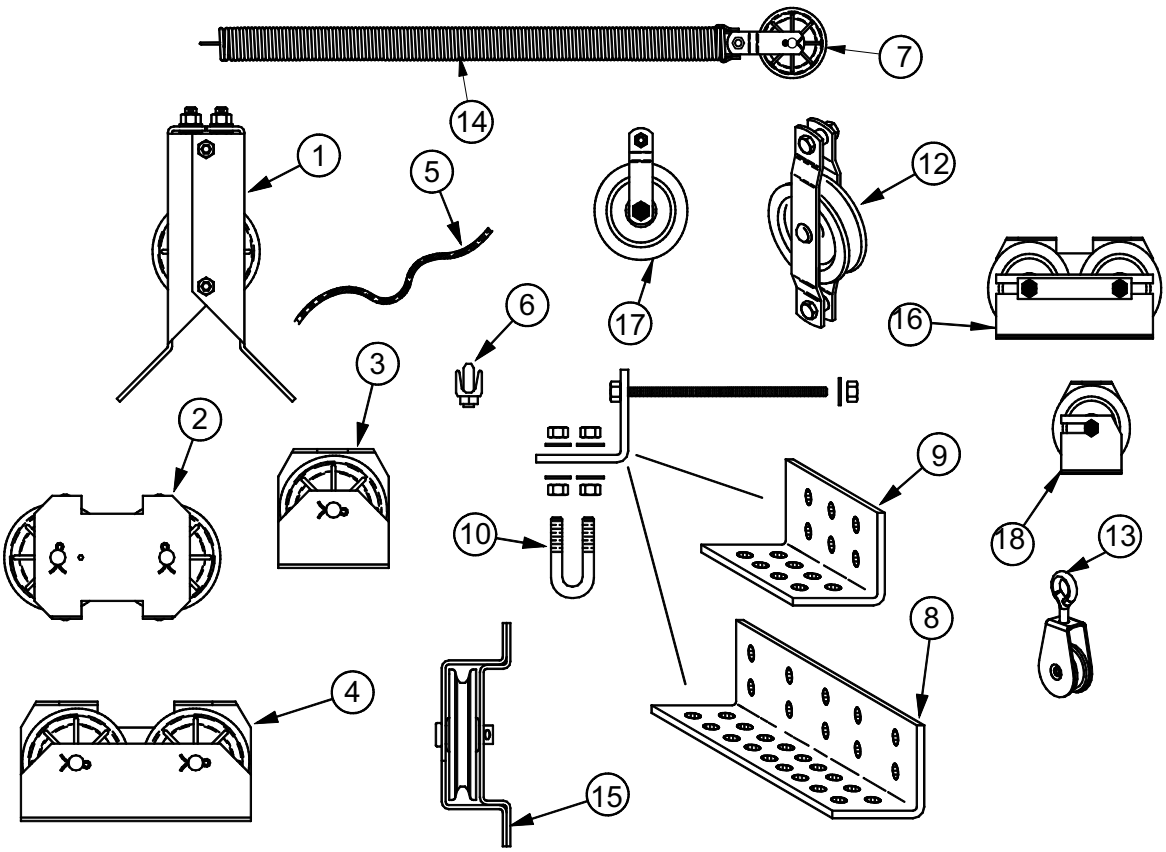

Item	Description	Part No.
1	Corner Pulley Assembly	35597
2	Double Pulley Assembly	27772
3	Pulley Kit	27301
4	Center Pulley Assembly	27302
5	3/16" Cable (150')—7 x 19 3/32" Cable—galvanized 7 x 7	13976 4973
6	3/16" Cable Clamp	732
7	Pulley Assembly	2500
8	Double Pulley Mounting Brkt.	35404
9	Single Pulley Mounting Brkt.	35405
10	3/16-18x7" U Bolt with Nuts	35602
11	5/16-18x7" Bolt	4412-20
12	Double Eye Pulley	2501
13	.875 Nylon Pulley	44577
14	160# Tension Spring	47958
15	Pulley Assembly	28429
16	4.5" Steel Double Pulley Assembly	43129
17	4.5" Steel Pulley Assembly	43005
18	4.5" Steel Single Pulley Assembly	43128

Figure 47. Optional Part Numbers

Note: The original, authoritative version of this manual is the [English] version produced by CTB, Inc. or any of its subsidiaries or divisions, (hereafter collectively referred to as "CTB"). Subsequent changes to any manual made by any third party have not been reviewed nor authenticated by CTB. Such changes may include, but are not limited to, translation into languages other than [English], and additions to or deletions from the original content. CTB disclaims responsibility for any and all damages, injuries, warranty claims and/or any other claims associated with such changes, inasmuch as such changes result in content that is different from the authoritative CTB-published [English] version of the manual. For current product installation and operation information, please contact the customer service and/or technical service departments of the appropriate CTB subsidiary or division. Should you observe any questionable content in any manual, please notify CTB immediately in writing to: CTB Legal Department, P.O. Box 2000, Milford, IN 46542-2000 USA.

Revisions to this Manual

Page No.	Description of Change
1	Added (White) to description on main page.

Contact your nearby Chore-Time distributor or representative for additional parts and information.

CTB Inc.
P.O. Box 2000 • Milford, Indiana 46542-2000 • U.S.A.
Phone (574) 658-4101 • Fax (877) 730-8825
E-Mail: ctb@ctbinc.com • Internet: http//www.ctbinc.com

Printed in the U.S.A.