48" and 52" Hyflo® Fans
Installation and Operators Instruction Manual

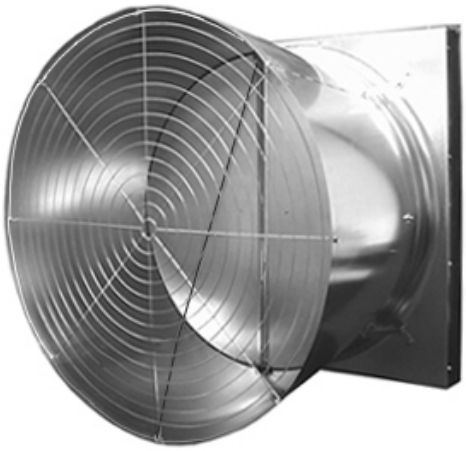

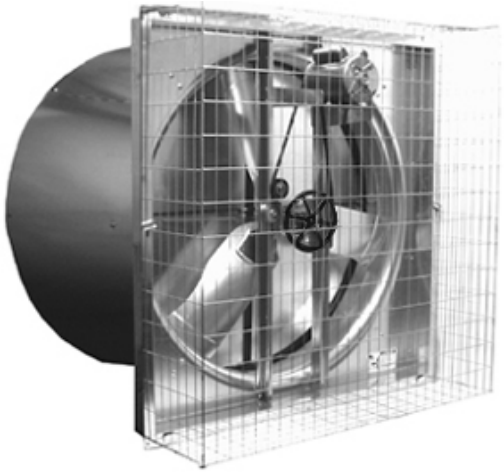

Contact your nearby Chore-Time distributor or representative for additional parts and information.

CTB, Inc.
PO Box 2000
Milford, Indiana 46542-2000 USA
Phone (574) 658-4101 Fax (877) 730-8825
Email: choretime@choretime.com
Internet: www.choretime.com

September 2026

MV1832U

Fan and Fan Framing Dimensions

Fan Dimensions

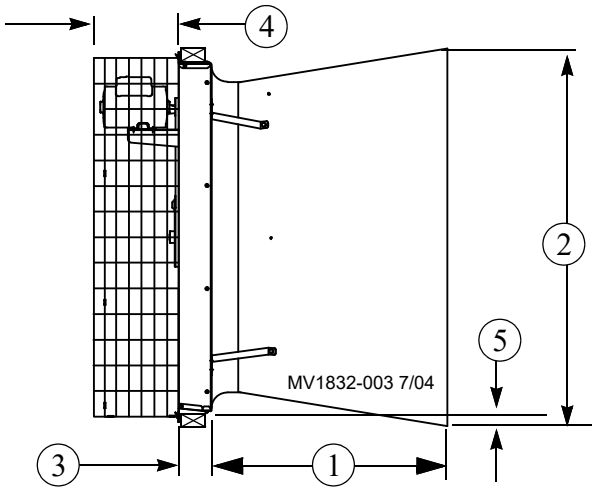

Item		48" Hyflo® 49451-XX	48" Hyflo® (9 Inch Panels) 49515-XX	52" Hyflo® 49511-XX	52" Hyflo® (9 Inch Panels) 49519-XX
1	Bottom Length	41-7/8" [106.36 cm]	41-7/8" [106.36 cm]	44" [111.76 cm]	44" [111.76 cm]
2	Vertical Dim. of Cone	59" [149.9 cm]	59" [149.9 cm]	64" [162.56 cm]	64" [162.56 cm]
3	Shroud Mounting Surface	5-1/8" [13.02 cm]	9-1/8" [23.18 cm]	5-1/8" [13.02 cm]	9-1/8" [23.18 cm]
4	Screen Depth	12.35" [31.37 cm]	12.35" [31.37 cm]	12.35" [31.37 cm]	12.35" [31.37 cm]
5	Vertical Dimension of Cone	2-5/16" [5.87 cm]	2-5/16" [5.87 cm]	4-1/8" [10.48 cm]	4-1/8" [10.48 cm]

Figure 1. Fan Dimensions

Fan Spacing

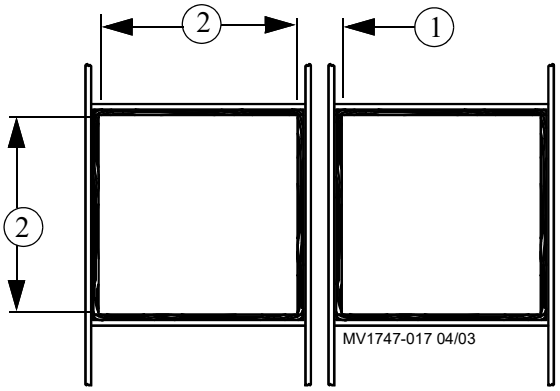

Planning the layout of the spacing between Fans is very important. Spacing too close together will cause interference between the discharge Cones. **The Rough Opening dimensions for Fans are shown above**.

Item	48" Hyflo®	52" Hyflo®
1	4" [10.16 cm] Minimum	8" [20.32 cm] Minimum*
2	55" [139.7 cm]	56-1/2" [143.51 cm]
*52" models can be mounted 3.5" apart if Cone Clips are used. **See Figures 16 and 17**.		

Figure 2. Fan Spacing

The Fan Inlet and exhaust must be kept clear of obstructions. Failure to keep the Fan airflow path clear of obstructions could cause loss of Fan performance and Fan damage.

Do Not operate these Fans with a variable speed control device. Operating static pressure should be less than 0.15 inches water column.

Fan Assembly/Installation

Assembly for 9" Panel Models (models 49515-XX and 49519-XX)

Hyflo® Fans with 9" panels need to be repositioned from their shipping position before they can be installed. Remove the Fan from the Crate, and with the Blade down, rest the Fan Shroud orifice on sawhorses. **Do Not rest the Fan on the blade. (See Figure 3 below)**

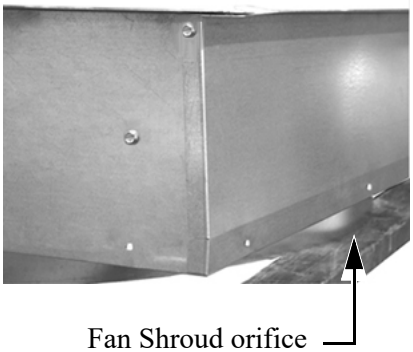

Figure 3. Orifice resting on Sawhorse

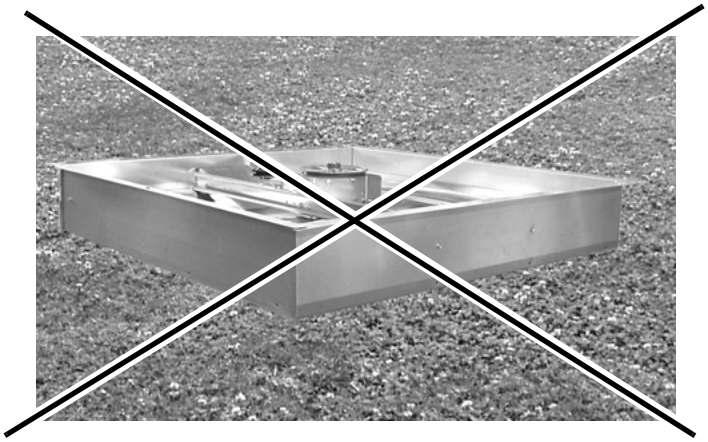

Do Not lay Fan on the ground with the weight of the Fan on the Fan Blade.

Remove the 1/4 x 1/2" Screws from the Side Panels **(Figure 4)**. Shift the Panels up until the second set of holes in the Panels line up with the holes in the Shroud **(Figure 5)**. Re-attach the Panels with the 1/4 x 1/2" Screws as shown. Repeat the same procedure for the Top and Bottom Panels. The additional 1/4 x 1/2" Screws that are required are included in the Parts Package. Once all of the Panels have been shifted attach the Panels at the corners with 1/4 x 1/2" Screws.

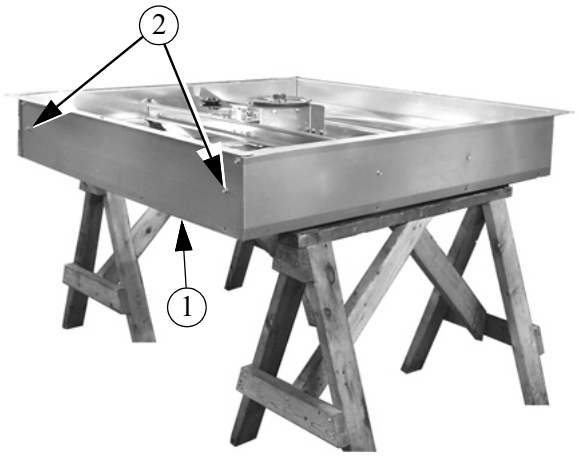

Figure 4. 9" Remove Screws

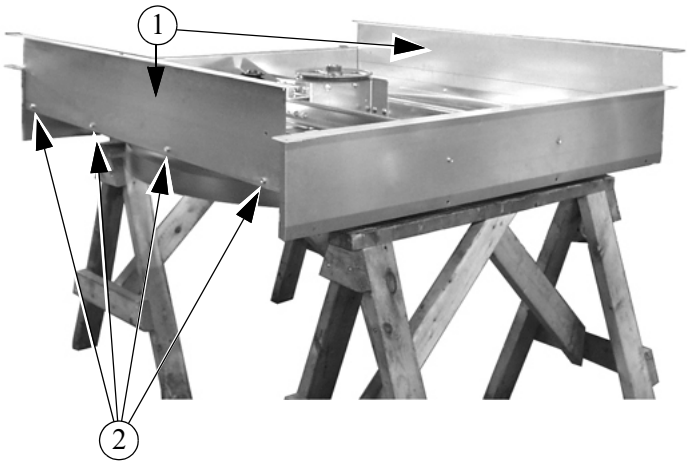

Figure 5. Shift Side Panels and re-attach

Item	Description
1	Side Panel
2	1/4 x 1/2" Screw

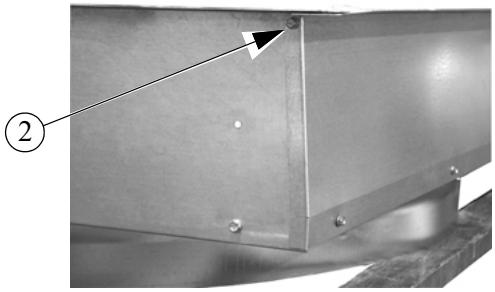

Figure 6. Attach Panels at Corners

Screen Clips

Set the Fan into the framed opening, but leave it hang out a few inches to allow for the insertion of four Screen Clips **(Item 1, Figure 7)**. With the Screen Clips oriented with the tab lock as shown, push them into the slots in the Fan Housing Panels and rotate them forward until they lock into place **as shown**. Slide the Fan forward flush with the rough opening making sure that the Clips do not fall out.

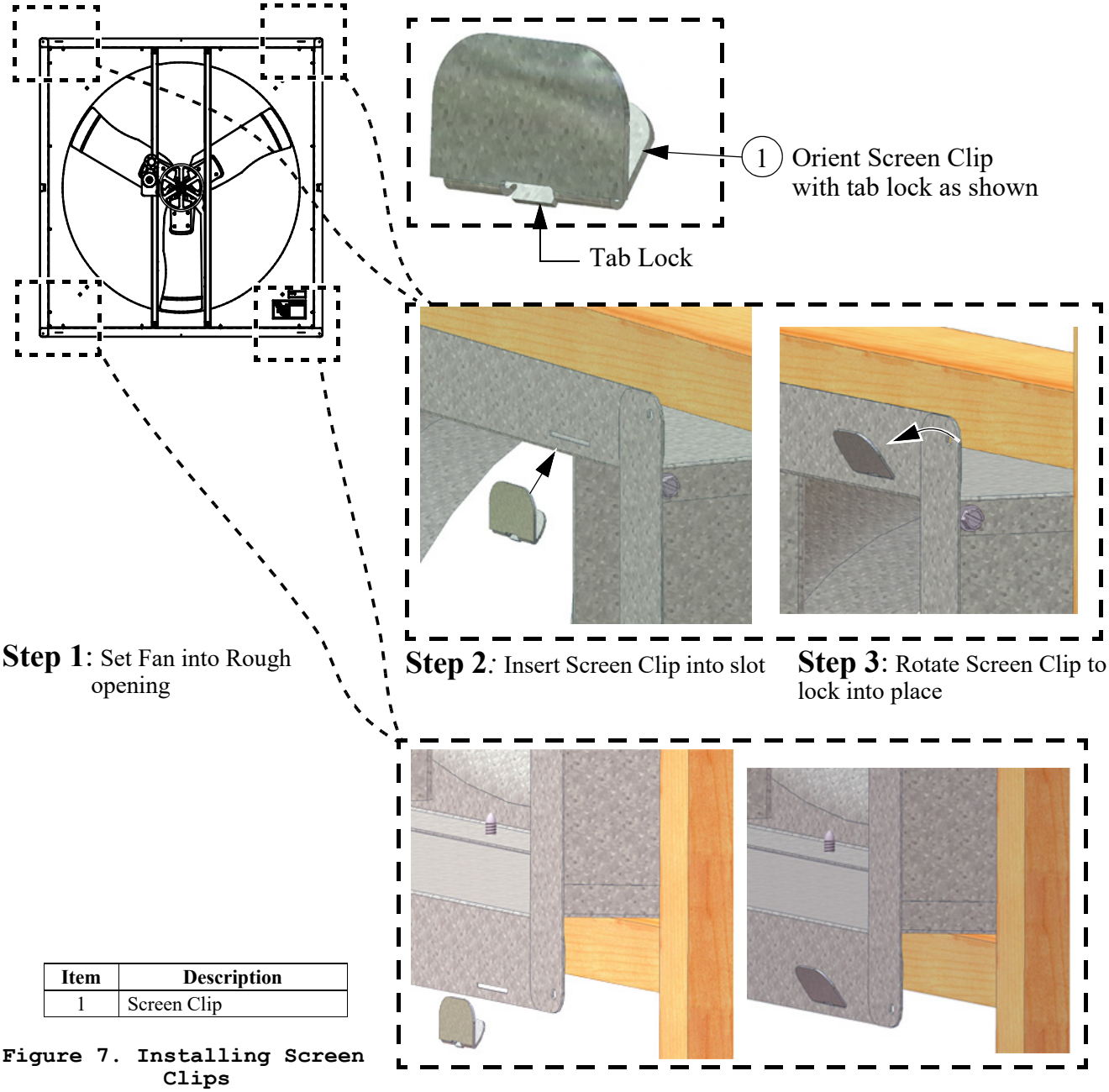

Item	Description
1	Screen Clip

Figure 7. Installing Screen Clips

Attaching the Fan to the Wall

Slide the Fan assembly into the rough opening and starting with the two side hole locations **(Detail A)**, use 1/4 x 1-3/4" Lag Screws **(Item 1, Figure 8)**, two Nylon Washers **(Item 2)**, and a Screen Retainer **(Item 3)** to attach the Fan to the Wall **as shown**. Use 1/4 x 1-3/4" Lag Screws to attach the Fan at the four corners **(Detail B)**, and at center Top and Bottom **(Detail C) as shown**.

Securing Screen Clips on 52" Fans only

For 52" Fan applications, the Screen Clips **(Item 4)** on the Top Panel need to be secured in place by installing a Lag Screw through the holes in the Panel and into the Framing as shown in **Detail "D"**.

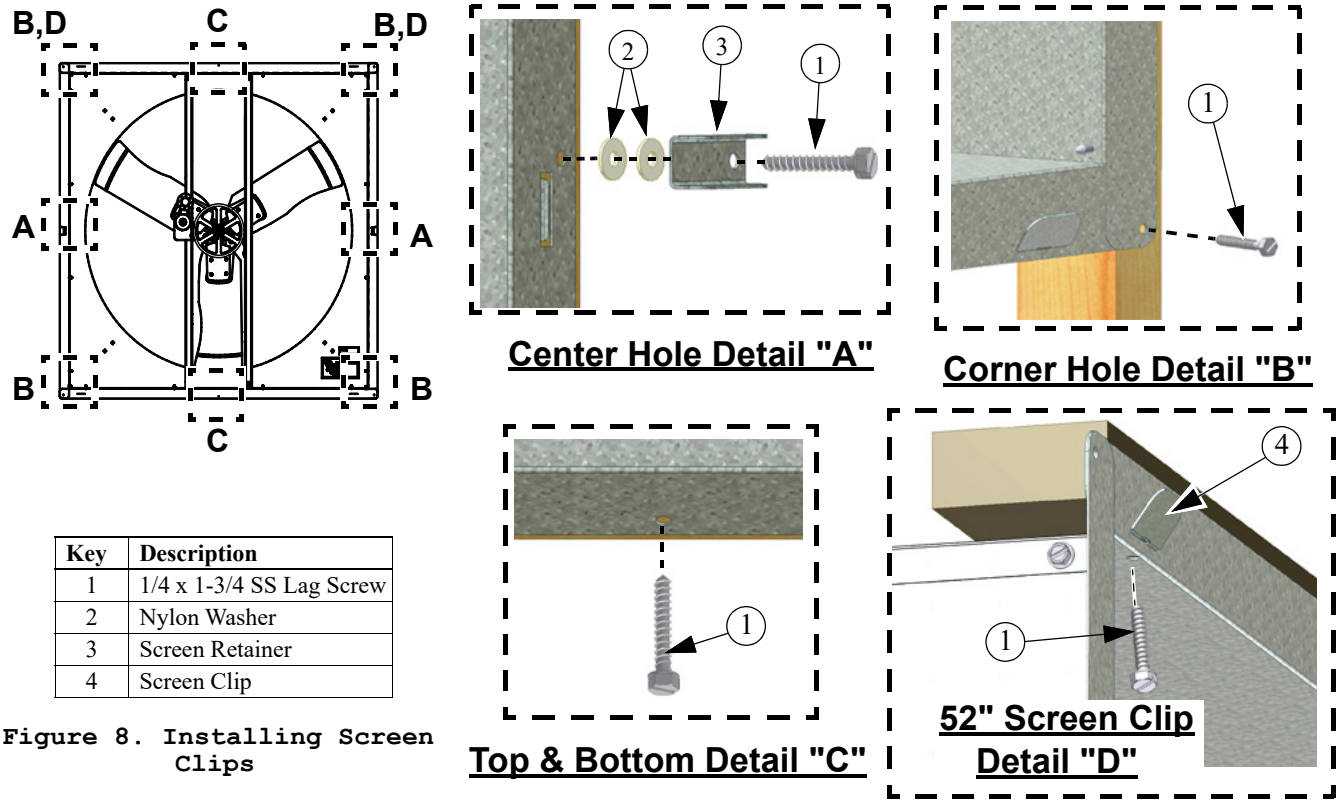

Key	Description
1	1/4 x 1-3/4 SS Lag Screw
2	Nylon Washer
3	Screen Retainer
4	Screen Clip

Figure 8. Installing Screen Clips

Motor Installation

Rotate the Motor Support Bracket into the upright position by removing the **Upper** Carriage Bolt and Nut and loosening the **Lower** Bolt and Nut **(See Figure 9)**. Rotate the Motor Support Bracket until it is perpendicular to the Fan Posts and fasten with (4) 5/16 Carriage Bolts and (4) 5/16 Flange Nuts. *Note that the Nuts go outside the Posts*. Remove the Motor from the Crate and attach it to the Motor Support Bracket with (4) 5/16 Carriage Bolts and (4) 5/16 Flange Nuts **as shown**.

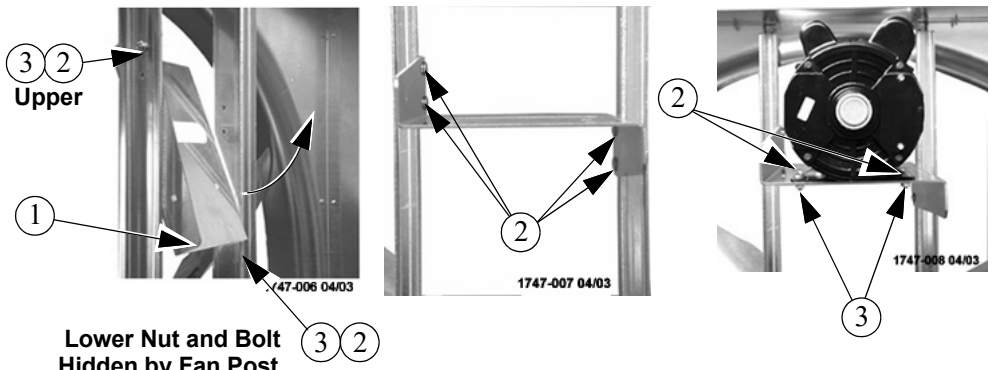

Item	Description
1	Motor Support Bracket
2	5/16 Carriage Bolt
3	5/16 Flange Nut

Figure 9. Attaching the Motor Support Bracket

Belt Installation

Guide the Belt through the Opening in the Motor Support Bracket and loop it over the Motor Sheave. Guide the Belt around the Tensioner Sheave and push on it to get enough slack to put the Belt on the Driven Sheave **as shown in Figure 10**. Make sure the Belt does not rub against the Motor Support Bracket.

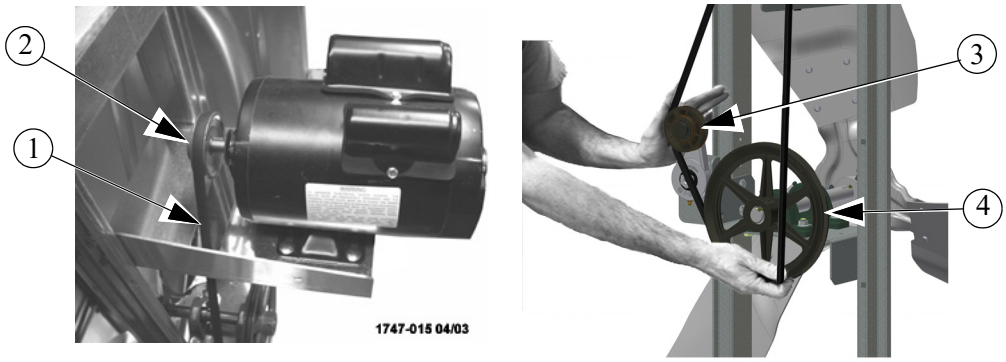

Item	Description
1	Belt
2	Motor Sheave
3	Tensioner Sheave
4	Driven Sheave

Figure 10. Installing the Belt

Cone Assembly and Installation

Step 1: Lay a Cone Panel down (Drain Tab at the bottom and slots to the left) and Prop the end up (Slotted end) with a 2 x 4 board.

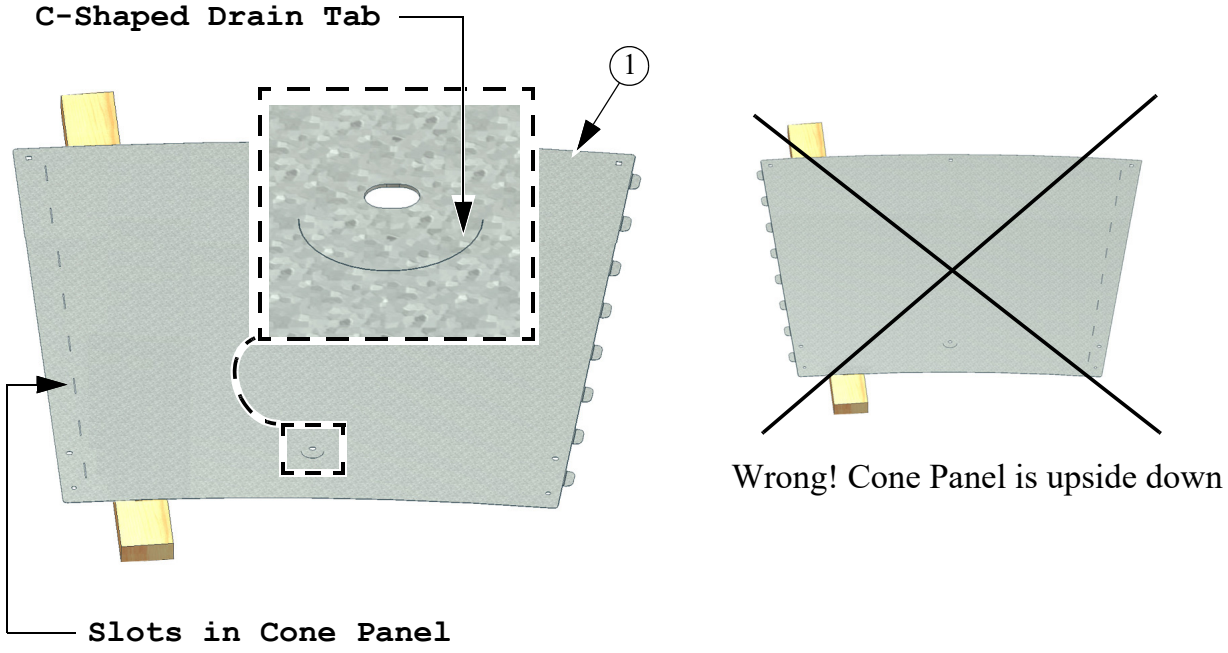

Item	Description
1	Cone Panel

Figure 11. Assembling Cone Panels

Step 2: Insert the Tabs of the second Cone Panel into the slots of the 1st Panel and lay it down locking the two Panels together.

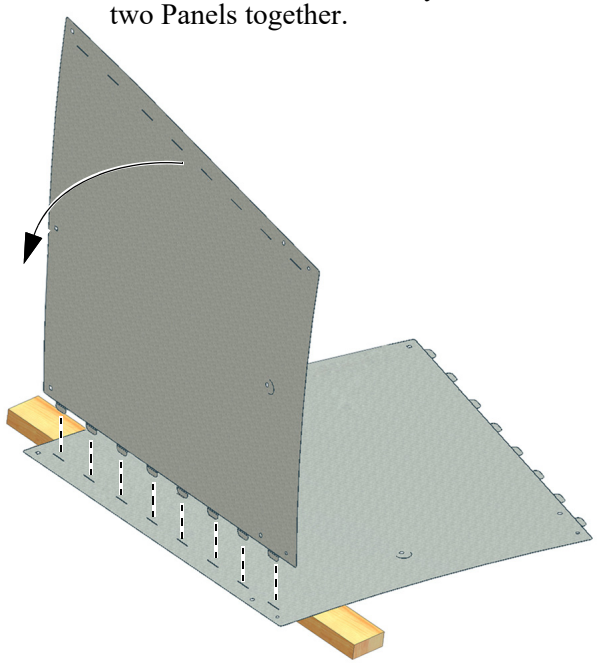

Step 3: Repeat Step 2 until all four Cone Panels are locked together.

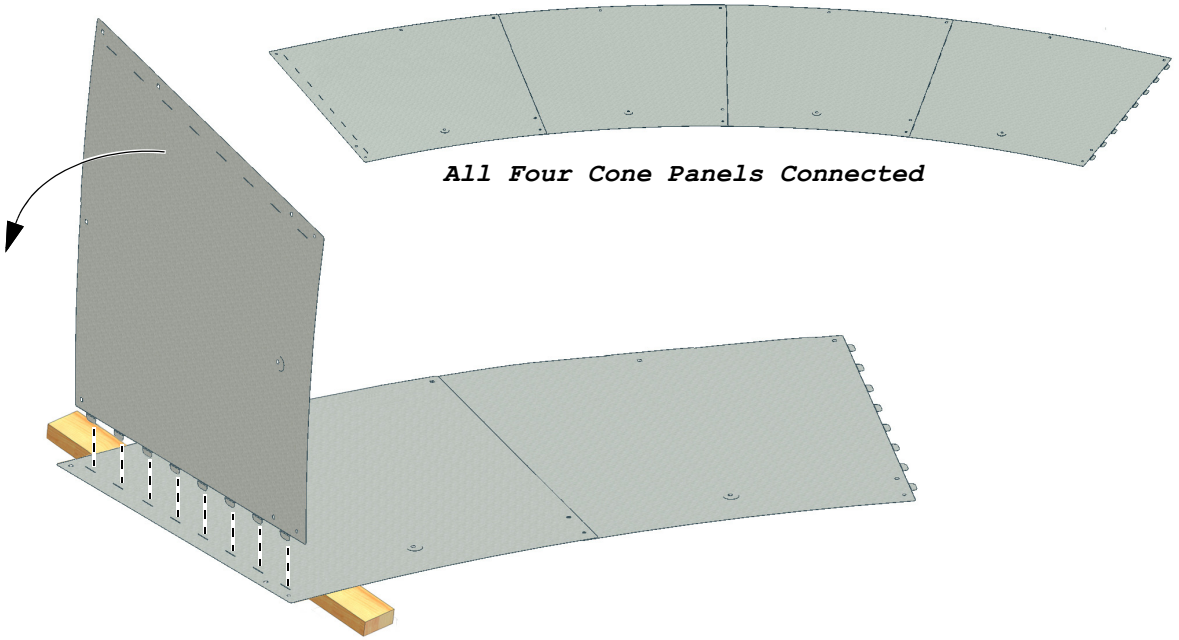

All Four Cone Panels Connected

Step 4: Stand the Panels up on edge and curl the Panels around making a Cone shape with the smaller diameter up. Insert the Tabs of the last Panel into the Slots of the 1st and allow the Cone to take its shape.



Step 5: Fasten the Cone Panels together with (4) 5/16" x 1/2" Hex Bolts threaded from inside the finished Cone. Do not tighten down the Nuts at this time. Leave the Nuts loose until the Cone is attached to the Fan.

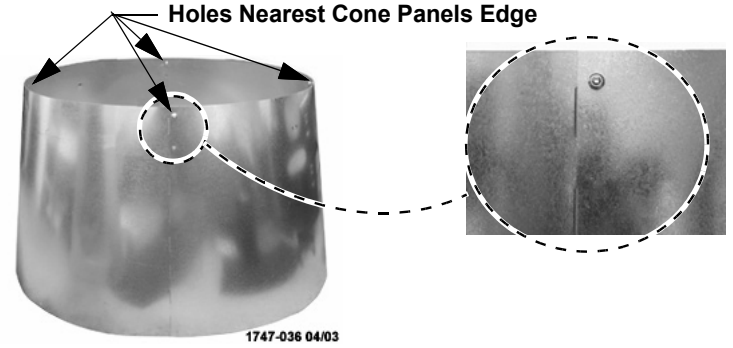

Figure 12. Assembling the Cone

Installing Door Assembly

Step 1: Remove the Tape **(Item 1)** holding the Nylon Cable to the Door.

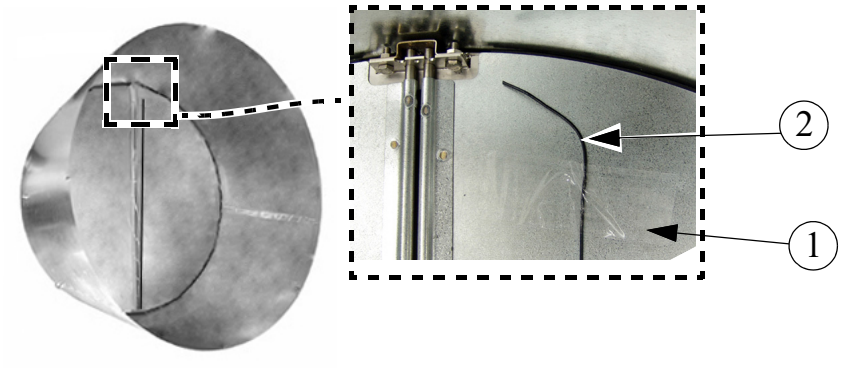

Step 2: Line up the Four Holes in the Door Ring with the holes in the Cone and thread (4) 5/16 x 1-1/4" Bolts **(Item 3)** in until they are tight. Do not install Nuts at this time. These Bolts will be use later to attach the Cone Brackets to the Cone Assembly

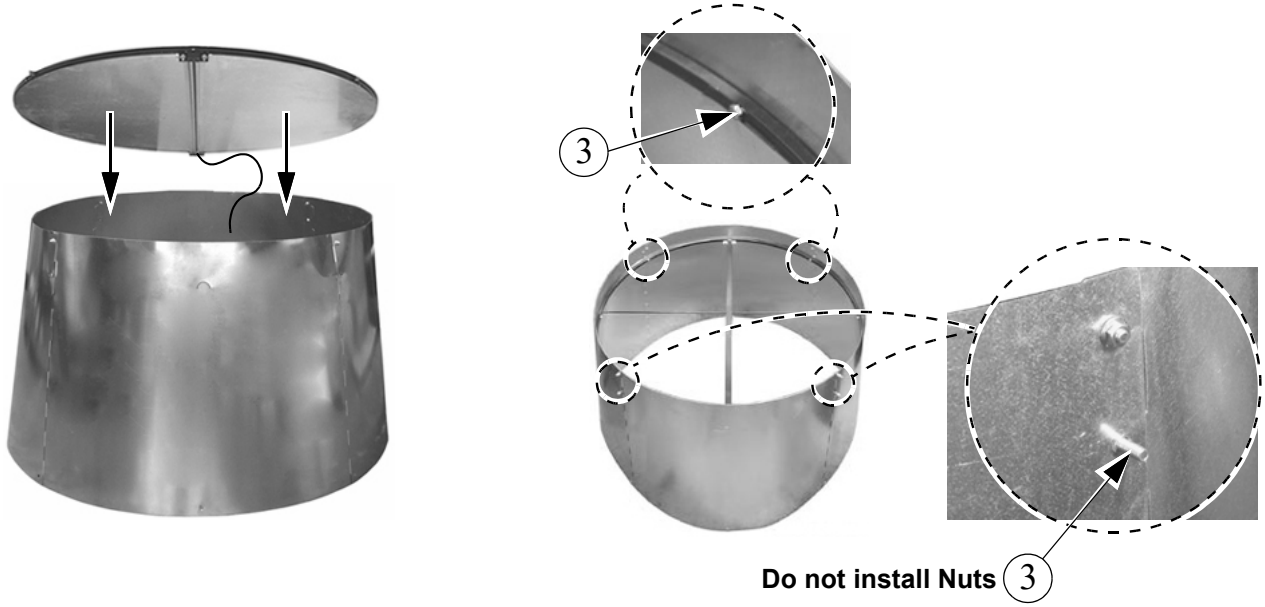

Step 3: Use (2) 5/16 x 1-1/4" Bolts **(Item 3)** and (2) 5/16" Flange Nuts **(Item 4)** to attach the Ring to the Cone using the holes located on both sides near the Door Center Brace **(Item 5)** as shown. The Nuts go outside the Cone.

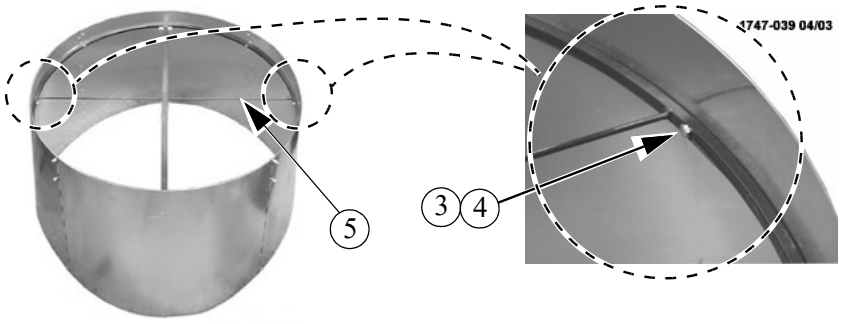

Item	Description
1	Tape
2	Nylon Cable
3	5/16 x 1-1/4" Bolt
4	5/16 Flange Nut
5	Door Center Brace

Figure 13. Installing the Door Assembly

Attaching the Door Stop Cable (Nylon Cable) and Grill.

Step 1: Line up the Grill Eyehooks with the holes in the Cone. Thread the free end of the Nylon Cable **(Item 2)** through the Bottom Grill Eyehook **(Item 1)** until it is flush with the Cone and secure it with a 5/16-18 Carriage Bolt **(Item 3)** and Flange Nut **(Item 4)** as shown.

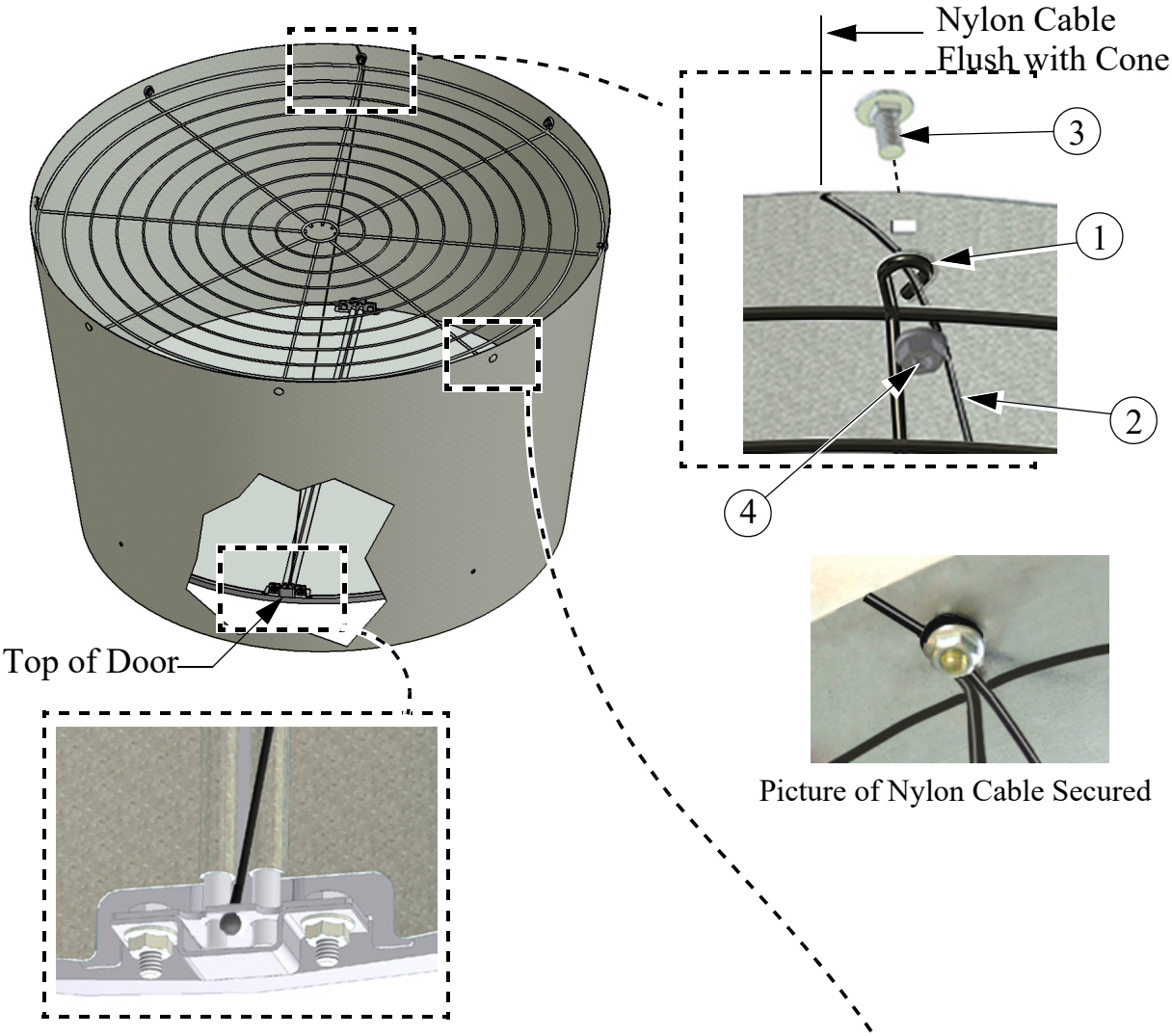

Step 2: Use 5/16 Carriage Bolts **(Item 3)** and Nuts **(Item 4)** to fasten the Grill to the Cone at the remaining 7 locations.

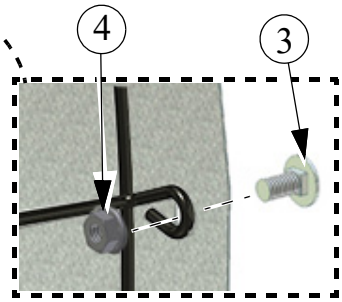

Item	Description
1	Bottom Grill Eyehook
2	Door Stop Cable (Nylon Cable)
3	5/16-18 x .625 Carriage Bolt
4	5/16-18 Flange Nut

Figure 14. Installing the Door Stop Cable

Installing Fans 60-1/2" to 64-1/2" on Center

If 52" Fans need to be installed 60-1/2" to 64-1/2" on center, Grills can be cut to avoid interfering with one another.

1.Cut the horizontal Screen wire **as shown** in F**igure 15 below**.

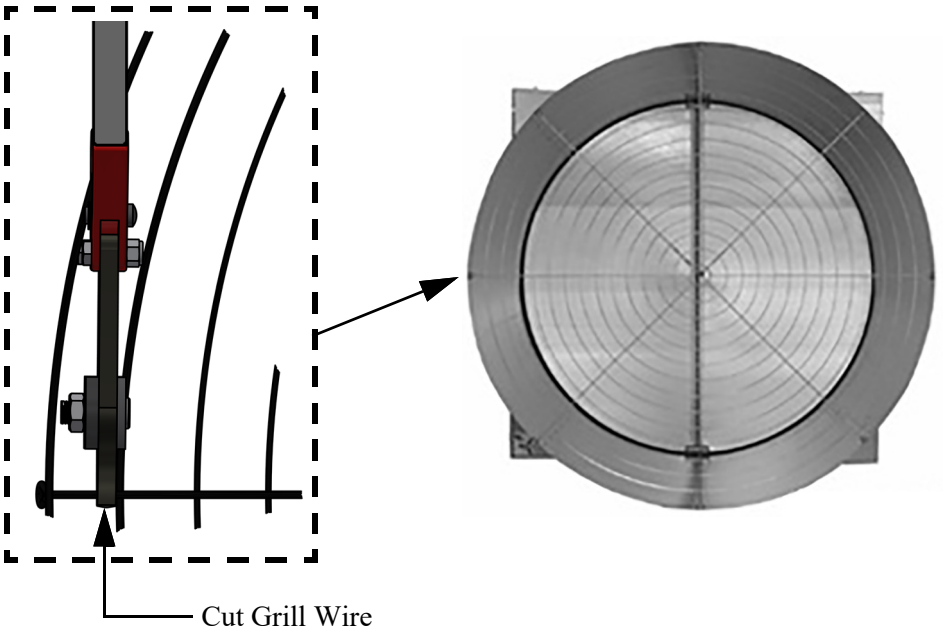

Figure 15.Cutting Grill for Fans under 60-1/2" to 64-1/2" on Center

2.Install a Cable Clamp (Included in parts package) to hold the Grill in place. **Figure 16 below**.

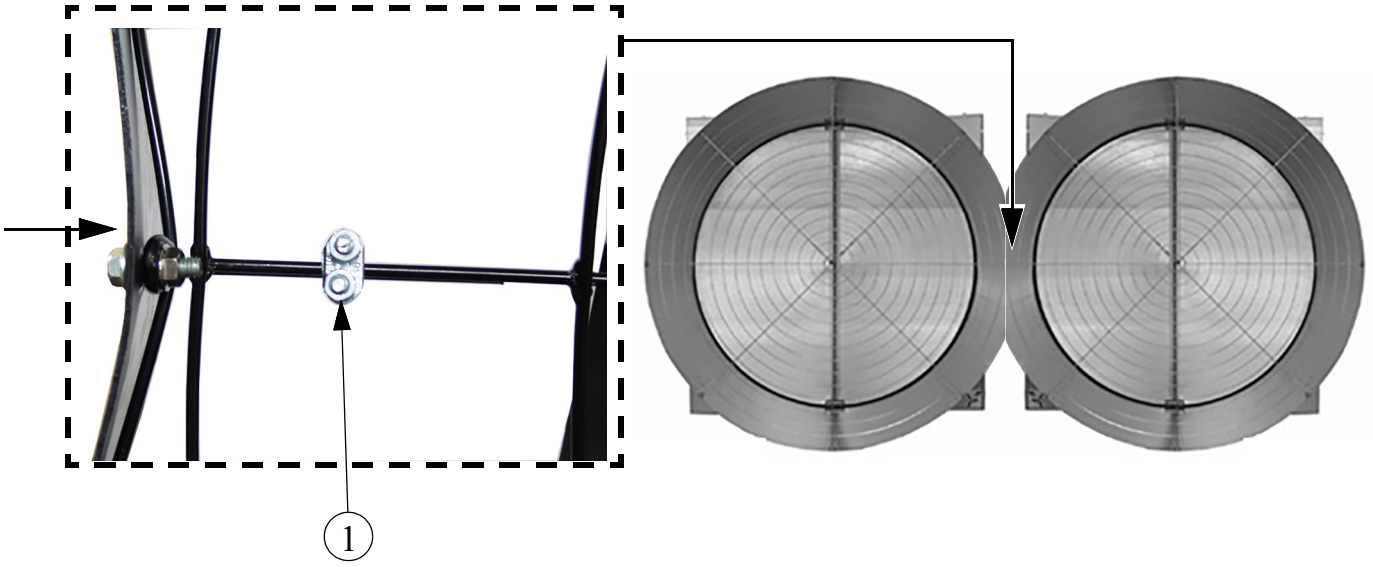

Item	Description
1	Cable Clamp

Figure 16.Cable Clamps on Grill

Assembling the Cone to the Fan

Use 5/16 x 5/8" Carriage Bolts and 5/16 Flange Nuts to attach the ***four*** Cone Brackets to the Fan Shroud **as shown in Figure 17**.

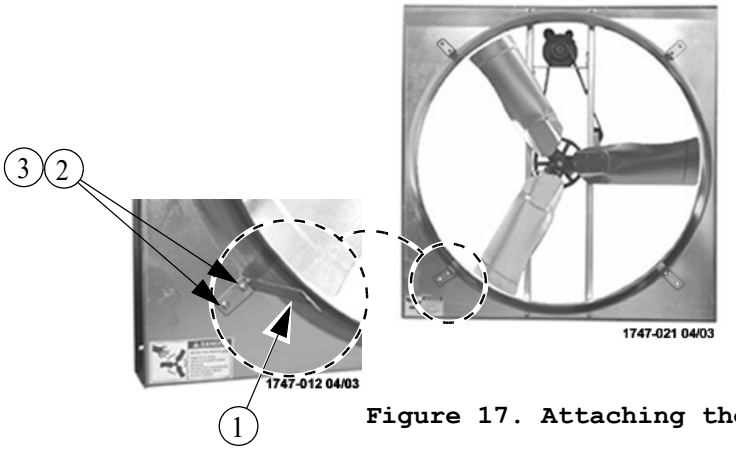

Item	Description
1	Cone Bracket
2	5/16 x 5/8" Carriage Bolt
3	5/16 Flange Nut

Figure 17. Attaching the Cone Brackets

Mounting the Cone and Door Assembly on the Fan requires at least two people. Pick up and orient the Cone with the Door Stop Cable **(Item 1, Figure 18)** attached at the top and rest the Cone on top of the Fan Orifice **as shown**. Attach the top of the Cone to the Cone Brackets **(Item 2)** with the Bolts that were previously threaded through the Ring and Cone and secure with 5/16 Flange Nuts **(Item 3)**. Only hand tighten the Nuts at this time. Working around the Fan Orifice from inside the fan, in a circular motion Slide the Cone over the Fan Orifice. The Cone will Fit snug. Use the Bolts previously threaded through the Ring and Cone and the 5/16 Flange Nuts to secure the bottom of the Cone to the Fan **as shown**. Use a Level and rotate the Cone until the Door center rail is Vertical **(See Figure)**. Now tighten all Hardware.

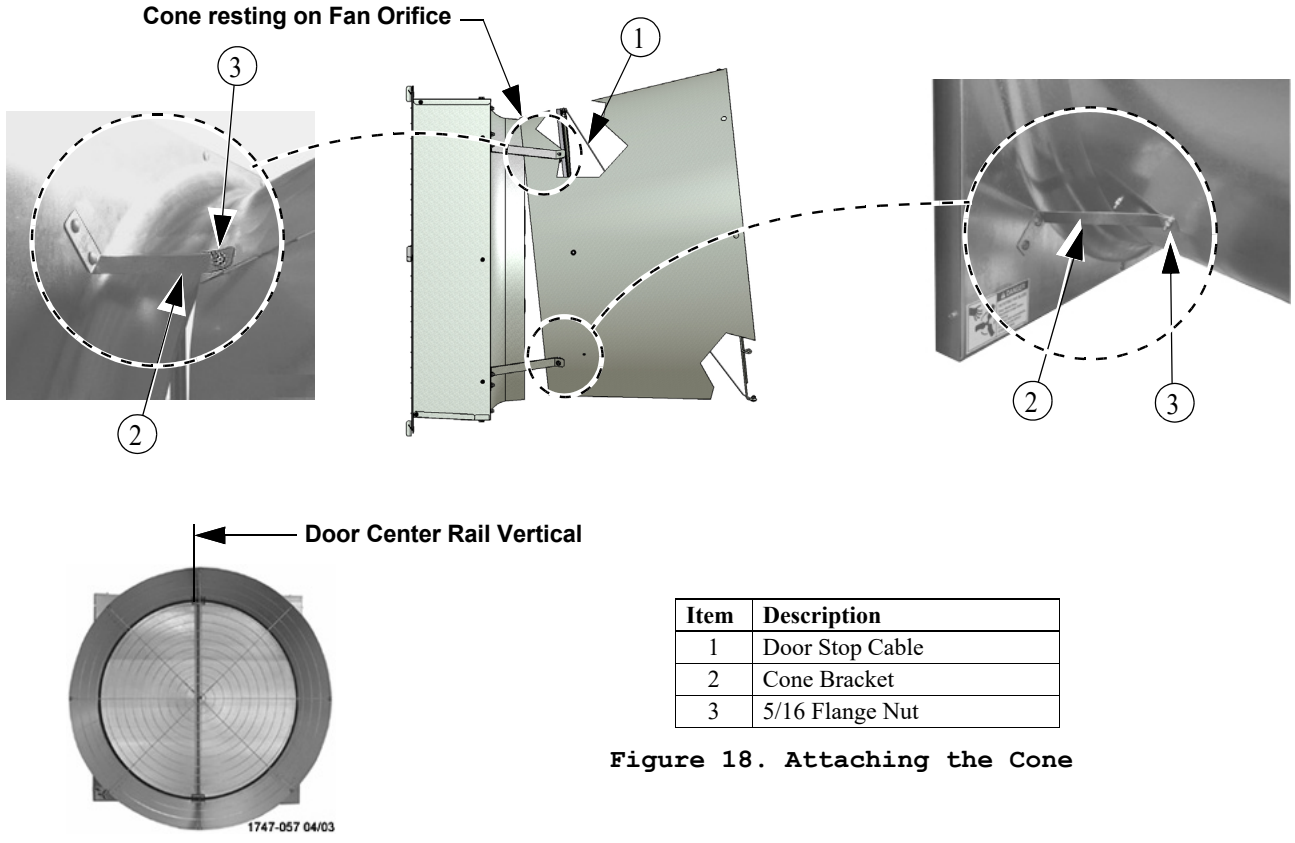

Item	Description
1	Door Stop Cable
2	Cone Bracket
3	5/16 Flange Nut

Figure 18. Attaching the Cone

Door Spring Assembly

On the Door Assembly, at the middle of the Door Center Brace, attach the Spring Mounting Bracket **(Included in the Parts Package)** as shown in **Figure 19 below**.

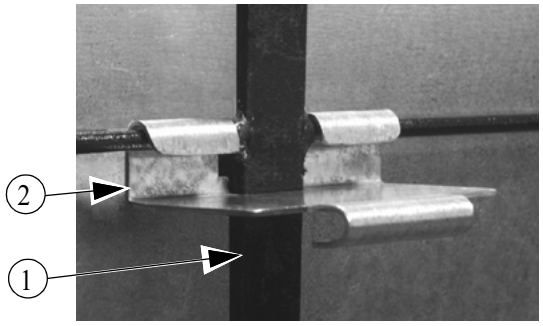

Item	Description
1	Door Center Brace
2	Spring Mounting Bracket

Figure 19. Attaching the Spring Mounting Bracket

Hook the rounded ends of the Door Springs onto the Spring Mounting Bracket. Stretch the Door Springs out and hook them in the 3/32" holes in the Doors (**See Figure 20)**.

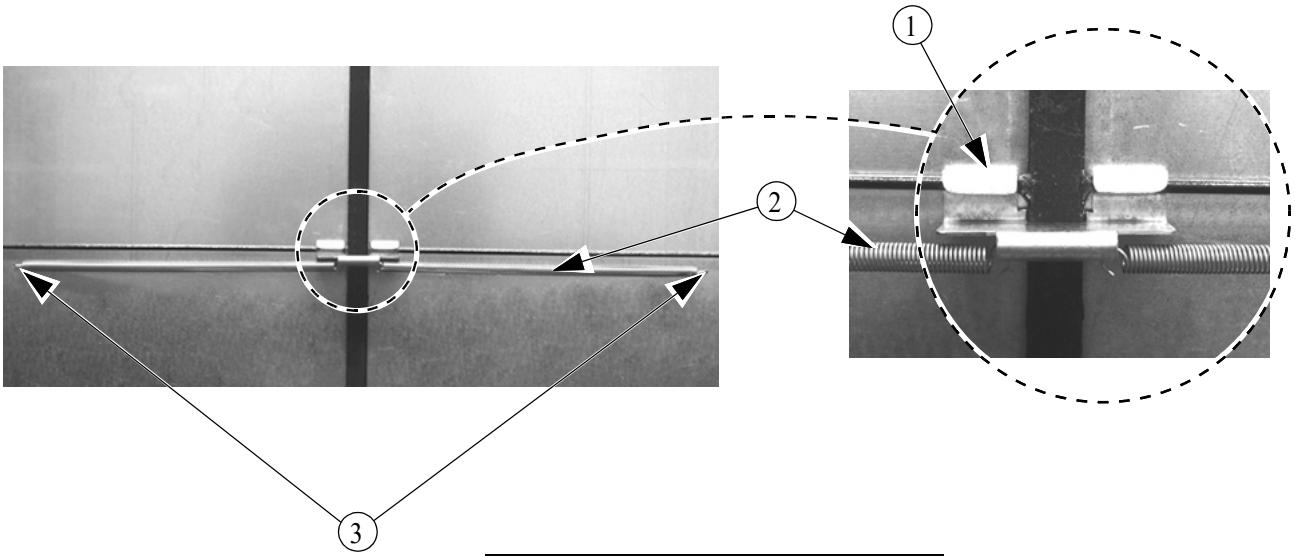

Item	Description
1	Spring Mounting Bracket
2	Door Spring
3	3/32" Hole in Door

Figure 20. Attaching the Door Springs

Cone Drain Tabs

The Fan Cone is designed with a C-Shaped Drain Tab located at the back of the Bottom Cone Panel. Use a screw driver to push the Drain Tab out as shown in **Figure 21 below**.

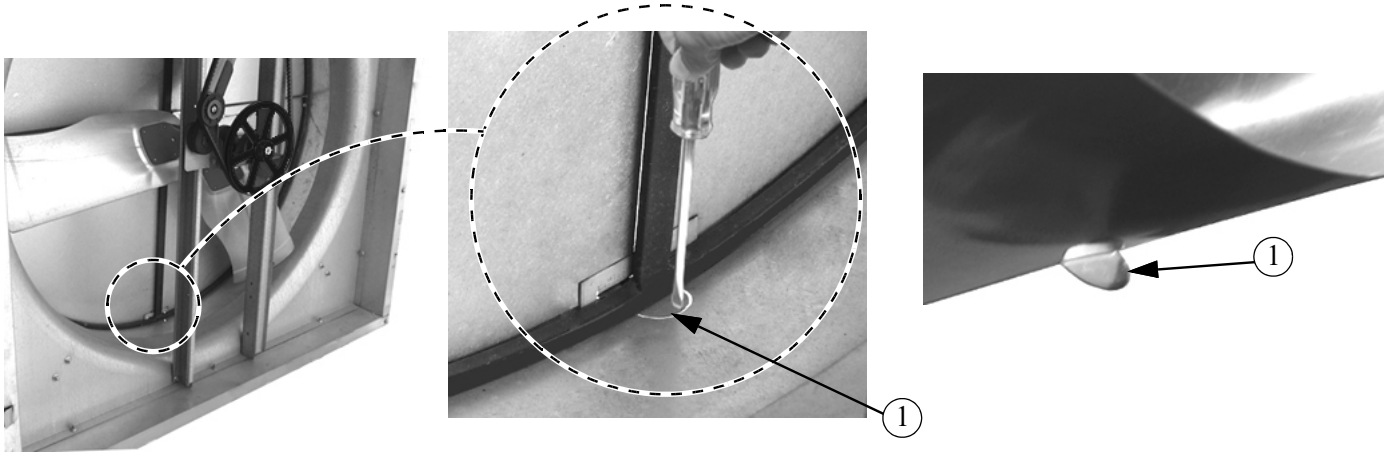

Item	Description
1	Drain Tab

Figure 21. Cone Drain Tab

Assembling the screen

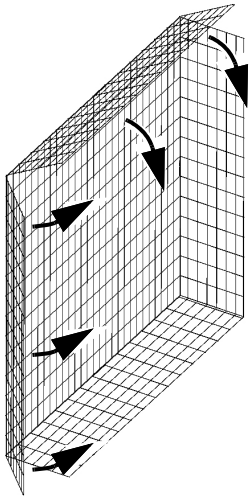

1. Fold the Screen Sides as shown.

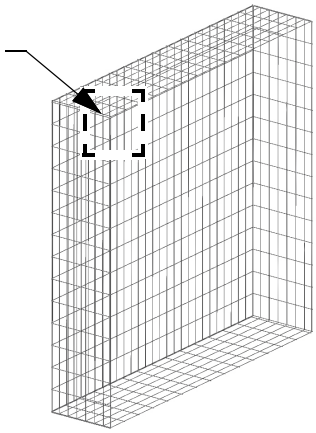

2. Install a spring (54480) **in the upper left corner** following steps A through D below. After Step D is complete go to step 3.

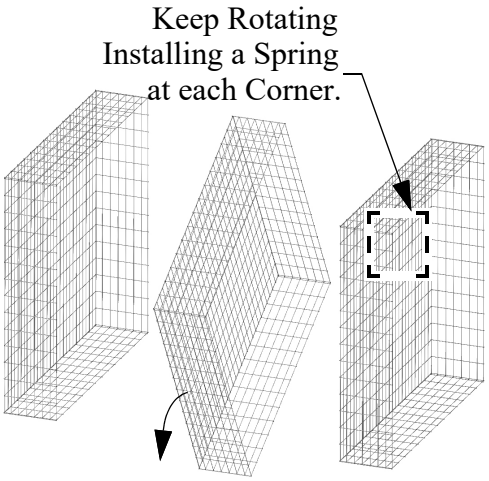

3. Rotate the Screen in the direction shown installing a Spring at a second corner. **Repeat for remaining Corners.**

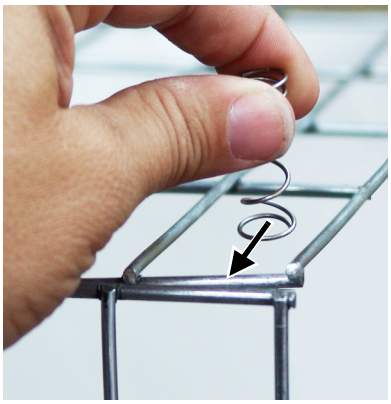

A) Slide a Spring (54480) over both Screen Panel Wires exactly as shown.

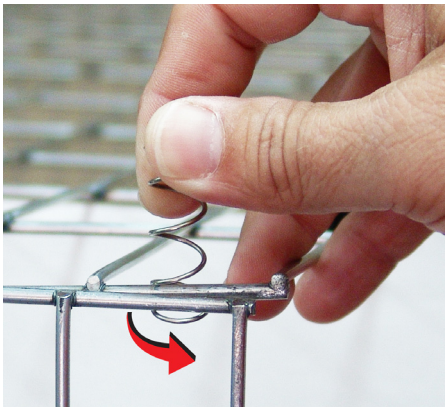

B) Rotate the Spring Counter-Clockwise until the end of the Spring snaps over the Side Panel Wire.

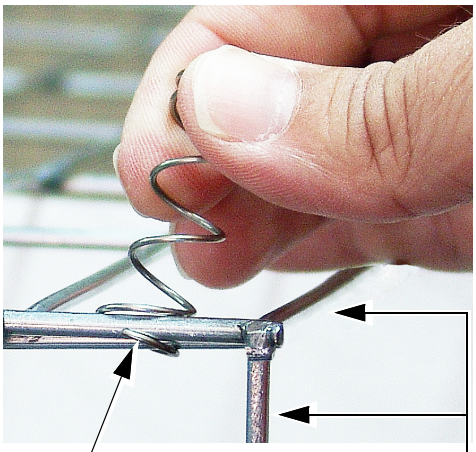

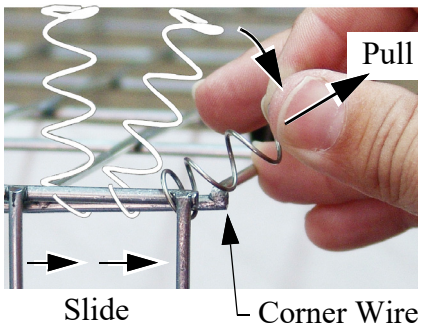

C) Slide and Pull Spring over Corner Panel Wire.

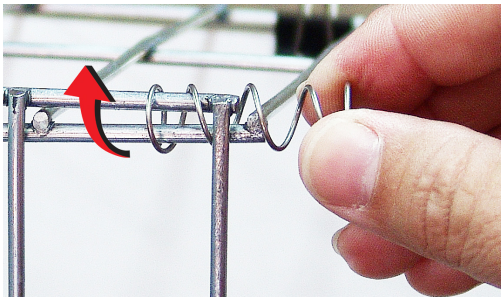

D) Twist Spring Clockwise until it is passed the outside wire and snapped firmly in place.

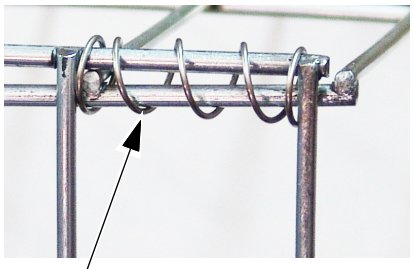

Wiring

3. Check that the electrical power being supplied to the Fan matches the electrical Specifications on the Fan and Motor Decals.

4. Remove the Motor Access Cover.

5. Install an electrical disconnect within reach of each Fan installed.

6. Connect the cord to the motor according to the wiring diagram on the motor. Verify that the motor is connected for counter clockwise rotation (viewing the back of the motor, opposite the shaft end.)

7. Follow local, state, and national electrical codes for wiring. Cut out one section of the Screen to route the cord out of the Fan: This will allow for the Screen to be removed without interfering with the Cord. **(See Figure 22)**. Attach the cord to the Wall using a Lag Screw and Cord Clip. Allow enough slack in the cord to form a "drip loop" for moisture to fall away from the cord and not into the motor

NOTE: For variable frequency drive wiring, see instruction located in the 52" Hyflo frequency drive kit (part no. 51738).

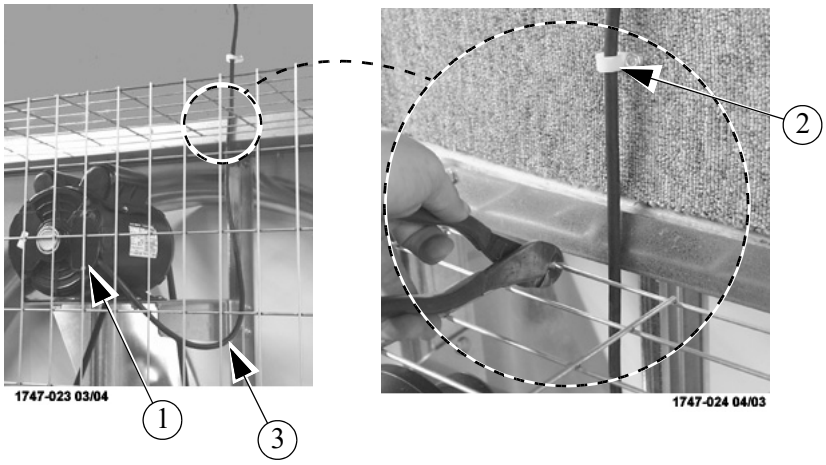

Item	Description
1	Motor Access Cover
2	Cord Clip
3	Drip Loop

Figure 22. Cut out Screen for Motor Wiring

Installing the Screen

Step 1: Hang the Screen **(Item 1)** on the four Screen Clips **(Item 2)** and position it so the Screen Wire is captured between 1/8" tall Tabs and Screen Retainers **(Item 3)**.

Step 2: Rotate the two Screen Retainers to capture the Screen.

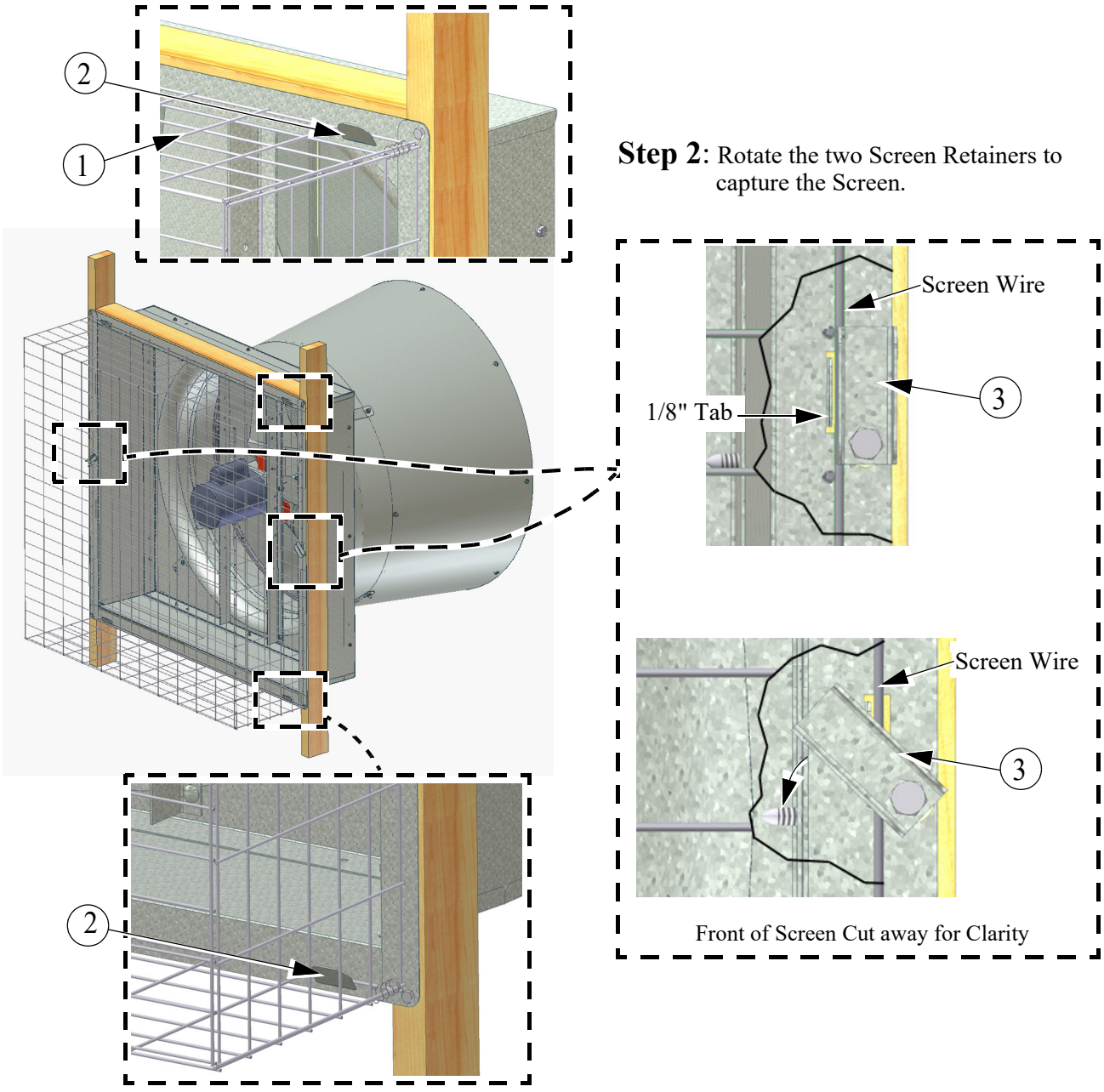

Item	Description
1	Screen
2	Screen Clip
3	Screen Retainer

Figure 23. Installing the Screen

Maintenance

IMPORTANT! Disconnect Power Prior To Maintaining Or Cleaning The Fan. The fan may start automatically causing serious injury or death.

- Service and repair of fans should be done only by a qualified technician.
- Minimize contact of moisture or corrosive chemicals to the surfaces of the fan components to maximize fan life.
- After washing fans, operate fans long enough to remove moisture from all fan surfaces.
- Keep the fan clean for maximum life and best performance. **Do Not spray water on the Fan Shaft Bearings, the Belt Tensioner, or the Motor.**
- Periodically check the V-Belt and replace if necessary. A worn Belt will cause a substantial drop in Fan performance or it can break and cause Fan failure. If a Belt rides below the Sheave edge, replace the belt. **(See Figure 24 below)**

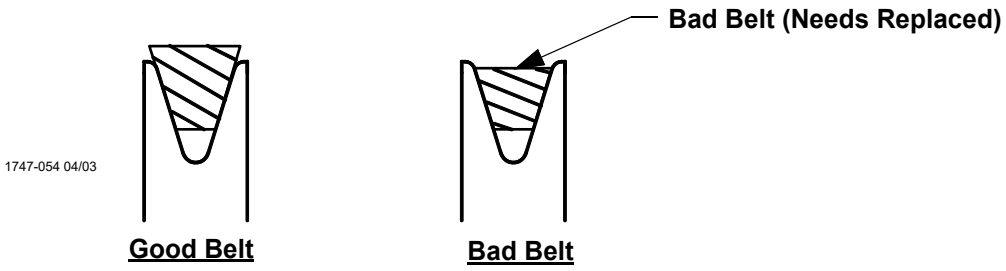

Figure 24. Belt Condition

- Check Belt Tension. The Belt should be tensioned just tight enough to minimize Belt slippage. Over tensioning the belt will cause premature Belt and Bearing wear. With a new Belt the Idler Sheave indicator mark should line up with the third notch in the Tensioner Housing **(See Figure 25)**.

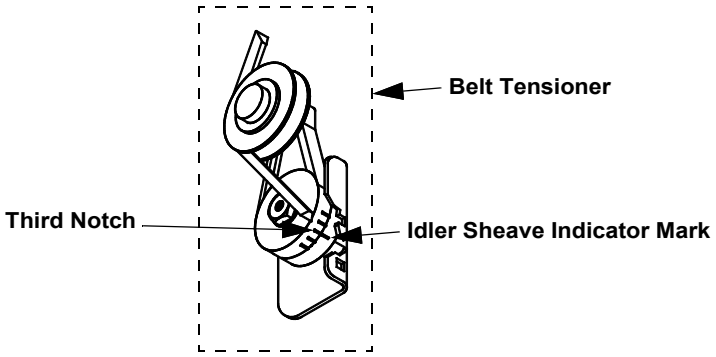

Figure 25. Idler Sheave Indicator Mark

- Keep Shutters, Blades, and Housing clear of obstacles for best air performance.
- Check Sheaves for wear. Replace if a Sheave groove is worn. **(See Figure 26)**

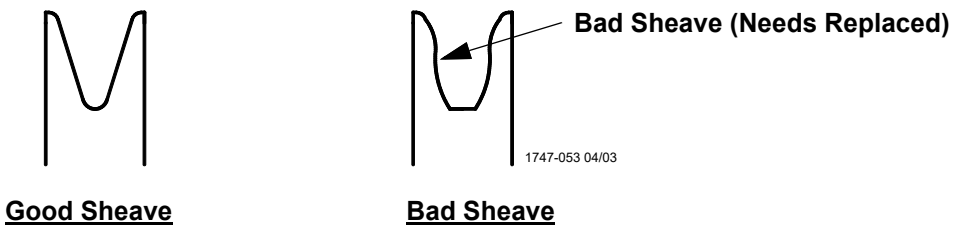

Figure 26. Sheave Condition

Fan Bearing and Belt Tensioner Lubrication

- Grease zerks are provided for lubrication on the fan shaft bearings and the belt tensioner.
- Lubricate the fan every 2-6 months or whenever these components get wet.
- Disconnect power to the fan before lubricating.
- Clean the zerk before lubricating to prevent contamination from entering the bearing.
- Use a high quality lithium based, NLGI #2, grease such as Shell Gadus S2 V100 2. Do not use incompatible greases containing aluminum, barium, calcium, bentonite clay or polyurea thickeners.
- Slowly rotate the fan shaft by hand while slowly applying the grease. Rapidly applying grease to a stationary bearing can damage the bearing seals.
- Apply about .10 oz (2.8 g, 3.1 cc) of grease at a time or until a slight amount of grease can be seen purging from the seal.

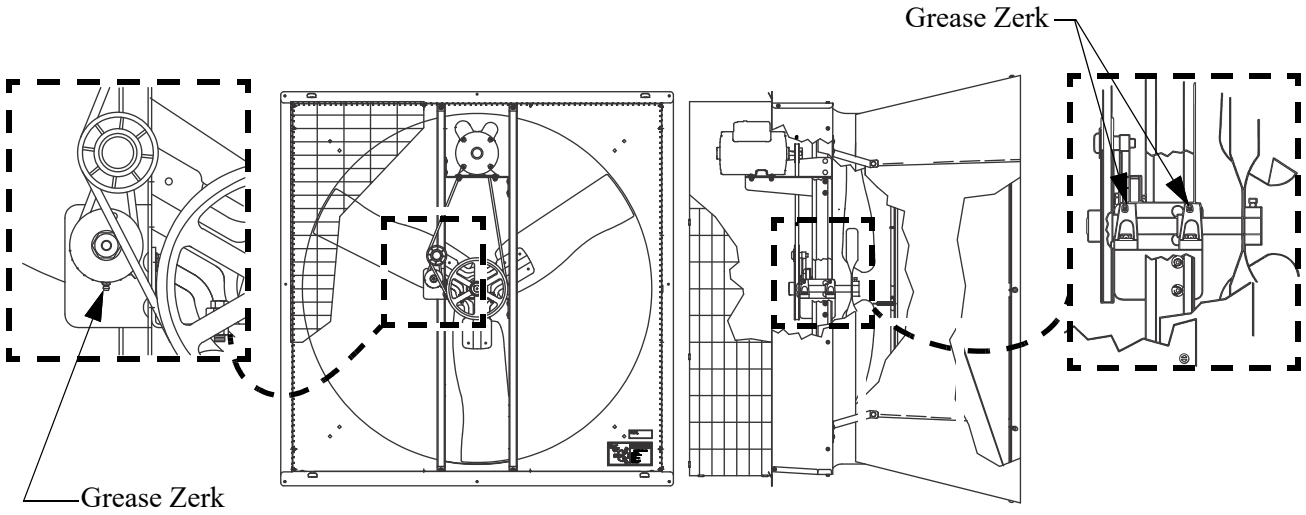

This page left blank intentionally.....

Hyflo® Fan Parts (Manufactured after July 2007)

See **Page 22** for Fans manufactured September 2004 to July, 2007.

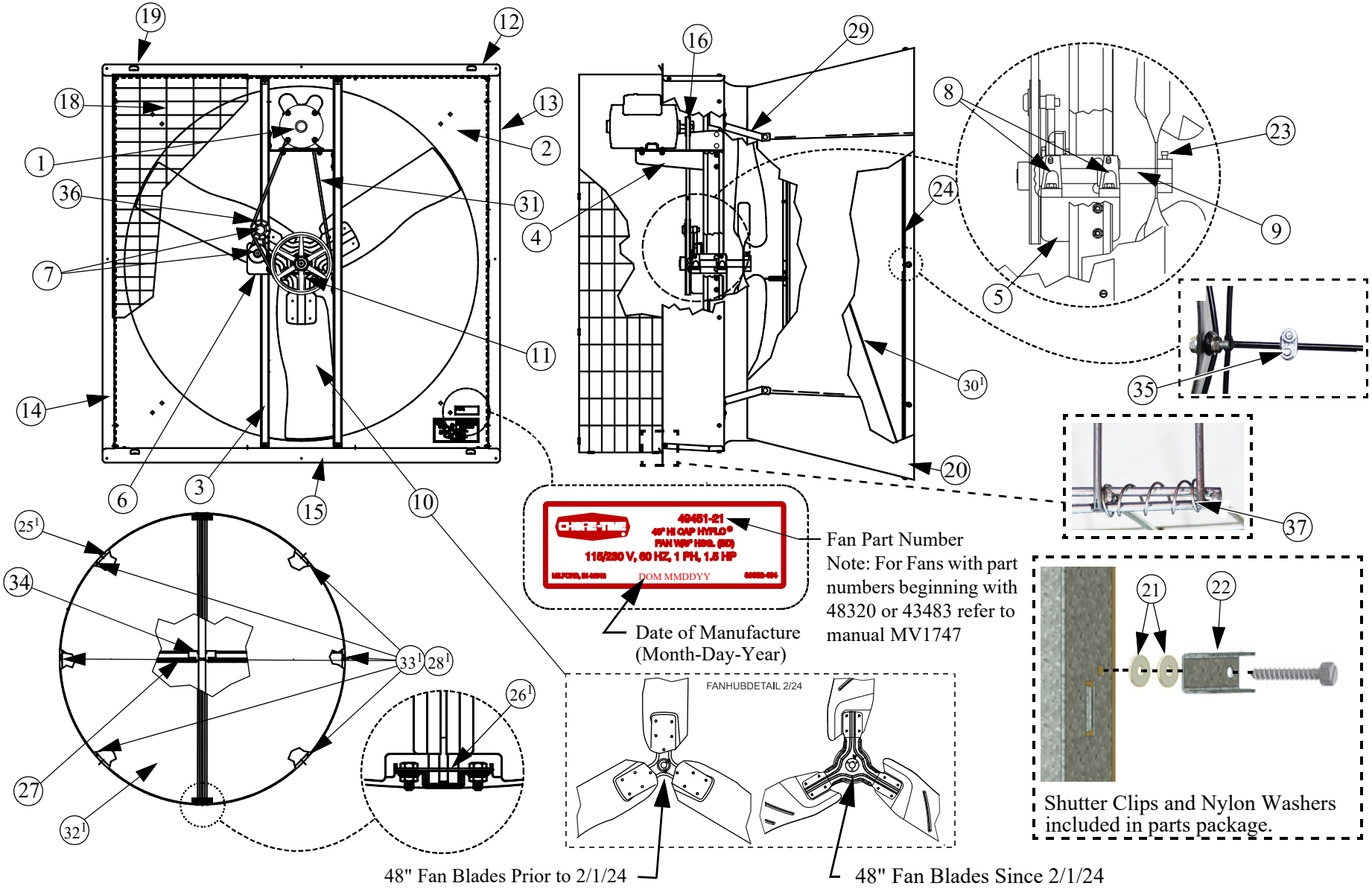

Fan Part Number
Note: For Fans with part numbers beginning with 48320 or 43483 refer to manual MV1747

Date of Manufacture (Month-Day-Year)

Shutter Clips and Nylon Washers included in parts package.

48" Fan Blades Prior to 2/1/24

48" Fan Blades Since 2/1/24

		48" Fan Part Numbers 5" Deep Housing 49451-XX 9" Deep Housing 49515-XX		52" Fan Part Numbers 5" Deep Housing 49511-XX 9" Deep Housing 49519-XX	
Item	Part Description	Part No.	Models-XX	Part No.	Models-XX
1	Motor, 1ph, 1.5hp, 1725 rpm	56850	-21	56850	-22
	Motor, 1ph, 1hp, 1725 rpm	37729	-22, -23	--	--
	Motor, 3ph, 1.5hp, 1725 rpm	47693	-52	--	--
	Motor, 3ph, 1hp, 1725 rpm	40157	-42	--	--
	Motor, 1ph, 1.5hp	--	--	48580	-21
	Motor, 1.5hp, 1.67SF 3PH-60HZ, 230/460V, 1.3SF 3PH-50/60HZ, 200-230/380-480V	56102	-41,-51	56102	-41,-51,-42,-52
2	Shroud, Fan	48362	All	47710	All
3	Post, Fan	48393	All	48072	All
4	Motor Support, Idler Drive	48396	All	48396	All
5	Bearing Support, Idler Drive	48395	All	48395	All
6	Tensioner Support	48394	All	48394	All
7	Tensioner Assy with Idler	48429	All	48429	All
8	Bearing, 1" Pillow Block	50553	All	50553	All
9	Fan Shaft	48397	All	48397	All
10	Fan Blade, High Efficiency	57832*	-23	--	--
	Fan Blade, Standard	57833**	-22, -42, -52	48507	-22, -42, -52
	Fan Blade, High Capacity	57834***	-21, -41, -51	48125	-21, -41, -51
11	Sheave, Driven Composite AFD84100	54898	-51, -52, -23	54898	-51, -52
	Sheave, Driven Composite AFD94100	54897	-21, -22, -41, -42	54897	-21, -22, -41, -42
12	5" Hyflo® Top Panel	51045	All	51049	All
	9" Hyflo® Top Panel	51047	All	51051	All
13	5" Hyflo® R.H. Side Panel	49474-2	All	49510-2	All
	9" Hyflo® R.H. Side Panel	49514-2	All	49518-2	All
14	5" Hyflo® L.H. Side Panel	49474-1	All	49510-1	All
	9" Hyflo® L.H. Side Panel	49514-1	All	49518-1	All
15	5" Hyflo® Bottom Panel	51044	All	51048	All
	9" Hyflo® Bottom Panel	51046	All	51050	All
16	Sheave, Driver AK27	1381	-23	--	--
	Sheave, Driver AK30	8773	-21, -22, -41, 42	8773	-21, -22, -41, -42
	Sheave, Driver AK32	48504	-51, -52	48504	-51, -52
18	Screen, 56 x 56 x 12	48794	All	48794	All
19	Clip, V Galv. Hyflo Screen	50409	All	50409	All
20	Cone Panel	51040	All	51041	All
21	Nylon Washer	4856	All	4856	All
22	Shutter Clip	36729	All	36729	All
23	5/16-24 x 1" HXHD Bolt	--	--	--	All
	5/16-24 x 1" SQHD Bolt	--	All		--
24	Grill, Galv. Cone	49447	All	56230	All
[1]25	Frame, Hyflo® Door	49439	All	49499	All
[1]26	Plate, SS Fan Door Pivot	49598	All	49598	All
27	Spring, Door Closing	49629	All	49629	All
[1]28	Magnet, .125 Thk. x .50 Dia.	48427	All	48427	All
29	Bracket, Cone Support	49445	All	49445	All
[1]30	Nylon Coated Door Stop Cable	50618-2	All	50618-1	All
31	V-Belt AX59	48505	-23,-51,-52	48505	-23,-52,-51
	V-Belt AX60	48430	-21, -22, -41, -42	48430	-21, -22, -41, -42
[1]32	Hyflo® Door	49446	All	49500	All
[1]33	Pop Rivet, SS 1/8 x .40	48936	All	48936	All
34	Support, Hyflo® Door Spring	49450	All	49450	All
35	Cable Clamp (Optional)	--	--	732	All
36	Idler with Bushings (For Repair)	50879	All	50879	All
37	Screen Spring (Package of 4)	54480-4	All	54480-4	All
[1]38	Hyflo® Door Assembly	49440	All	49498	All

*Was 45932 Blade Prior to 2/1/24
**Was 28140 Blade Prior to 2/1/24
***Was 46748 Blade Prior to 2/1/24
[1]Hyflo Door Assembly **(Item 38)** includes items 25,26,28,30,32,33.

Part Numbers (for Fans Manufactured September 2004 to July 2007)

Fans that were Manufactured from September 2004 to July of 2007 used four different Cone Panels and different Top and Bottom Housing Panels. If a Fan needs any of these parts replaced, the Fan must be retrofitted by purchasing ALL the parts listed in the table below.

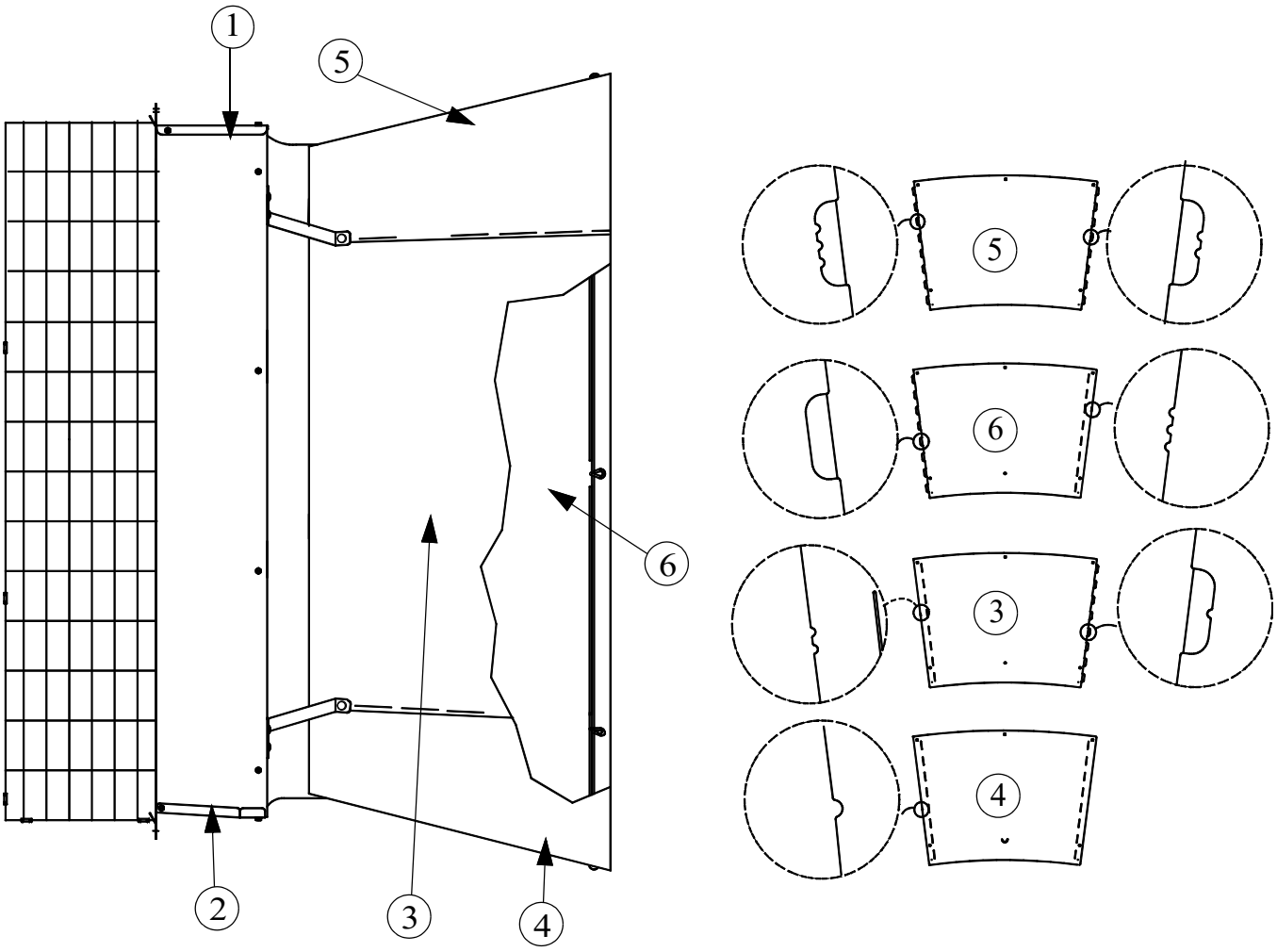

		48" Fan Part Numbers		52" Fan Part Numbers		
		5" Deep Housing 49451-XX 9" Deep Housing 49515-XX		5" Deep Housing 49511-XX 9" Deep Housing 49519-XX		
		2004-2007	Retrofit	2004-2007	Retrofit	
Item	Part Description	Part No.				Qty.
1	5" Hyflo® Top Panel	48671	51045	48685	51049	1
	9" Hyflo® Top Panel	49207	51047	49459	51051	1
2	5" Hyflo® Bottom Panel	49473	51044	49509	51048	1
	9" Hyflo® Bottom Panel	49513	51046	49517	51050	1
3	Cone Panel, Top Hyflo®	49441	51040	49505	51041	4
4	Cone Panel, Bottom Hyflo®	49442		49506		
5	Cone Panel, LH Hyflo®	49443		49507		
6	Cone Panel, RH Hyflo®	49444		49508		
30*	Cone Cable Assembly	--	50618-2	--	50618-1	1
19*	Fan Screen Clip	--	50409	--	50409	4
*Shown on **Page 20**.						

Safety Information

Carefully read all safety messages in this manual and on your equipment safety signs. Follow recommended precautions and safe operating practices. Keep safety signs in good condition. Replace missing or damaged safety signs.

DANGER: Electrical Hazard

Disconnect electrical power before inspecting or servicing equipment Ground all electrical equipment for safety. All electrical wiring must be done by a qualified electrician in accordance with local and national electric codes. Ground all non-current carrying metal parts to guard against electrical shock. With the exception of motor overload protection, electrical disconnects and over current protection are not supplied with the equipment.



DANGER: Rotating Fan Blade

Keep Hands away. Disconnect power before servicing. Fan may start automatically. Do not operate the Fan without the screens in place. Disregard to these things will cause serious injury including death.



Limited Warranty

Chore-Time Group, a division of CTB, Inc. ("Chore-Time") warrants new CHORE-TIME Hyflo® Fans manufactured by Chore-Time to be free from defects in material or workmanship under normal usage and conditions, for One (1) year from the date of installation by the original purchaser ("Warranty"). If such a defect is determined by Chore-Time to exist within the applicable period, Chore-Time will, at its option, (a) repair the Product or Component Part free of charge, F.O.B. the factory of manufacture or (b) replace the Product or Component Part free of charge, F.O.B. the factory of manufacture. This Warranty is not transferable, and applies only to the original purchaser of the Product.

CONDITIONS AND LIMITATIONS

THIS WARRANTY CONSTITUTES CHORE-TIME'S ENTIRE AND SOLE WARRANTY AND CHORE-TIME EXPRESSLY DISCLAIMS ANY AND ALL OTHER WARRANTIES, INCLUDING, BUT NOT LIMITED TO, EXPRESS AND IMPLIED WARRANTIES, INCLUDING, WITHOUT LIMITATION, WARRANTIES AS TO MERCHANTABILITY OR FITNESS FOR PARTICULAR PURPOSES. CHORE-TIME shall not be liable for any direct, indirect, incidental, consequential or special damages which any purchaser may suffer or claim to suffer as a result of any defect in the Product. Consequential or Special Damages as used herein include, but are not limited to, lost or damaged products or goods, costs of transportation, lost sales, lost orders, lost income, increased overhead, labor and incidental costs, and operational inefficiencies. *Some jurisdictions prohibit limitations on implied warranties and/or the exclusion or limitation of such damages, so these limitations and exclusions may not apply to you. This warranty gives the original purchaser specific legal rights. You may also have other rights based upon your specific jurisdiction.*

Compliance with federal, state and local rules which apply to the location, installation and use of the Product are the responsibility of the original purchaser, and CHORE-TIME shall not be liable for any damages which may result from non-compliance with such rules.

The following circumstances shall render this Warranty void:

- Modifications made to the Product not specifically delineated in the Product manual.
- Product not installed and/or operated in accordance with the instructions published by the CHORE-TIME.
- All components of the Product are not original equipment supplied by CHORE-TIME.
- Product was not purchased from and/or installed by a CHORE-TIME authorized distributor or certified representative.
- Product experienced malfunction or failure resulting from misuse, abuse, mismanagement, negligence, alteration, accident, or lack of proper maintenance, or from lightning strikes, electrical power surges or interruption of electricity.
- Product experienced corrosion, material deterioration and/or equipment malfunction caused by or consistent with the application of chemicals, minerals, sediments or other foreign elements.
- Product was used for any purpose other than for the care of poultry and livestock.

The Warranty and Extended Warranty may only be modified in writing by an officer of CHORE-TIME. CHORE-TIME shall have no obligation or responsibility for any representations or warranties made by or on behalf of any distributor, dealer, agent or certified representative.

Made to work.
Built to last.®

Note: The original, authoritative version of this manual is the English version produced by CTB, Inc. or any of its subsidiaries or divisions, (hereafter collectively referred to as "CTB"). Subsequent changes to any manual made by any third party have not been reviewed nor authenticated by CTB. Such changes may include, but are not limited to, translation into languages other than English, and additions to or deletions from the original content. CTB disclaims responsibility for any and all damages, injuries, warranty claims and/or any other claims associated with such changes, inasmuch as such changes result in content that is different from the authoritative CTB-published English version of the manual. For current product installation and operation information, please contact the customer service and/or technical service departments of the appropriate CTB subsidiary or division. Should you observe any questionable content in any manual, please notify CTB immediately in writing to: CTB Legal Department, P.O. Box 2000, Milford, IN 46542-2000 USA.

Revisions to this Manual

Page No.	Description of Change	ECO
10	New Grill and Changed 49504 to 732 Cable Clamp	
21	Item 24 Changed 49501 Grill to 56230 Grill	41235
	Item 35 49504 Cone Clip changed to 732 Cable Clamp	
Various	Pictorial changes to show new Grill	

Contact your nearby Chore-Time distributor or representative for additional parts and information.

CTB, Inc.
PO Box 2000
Milford, Indiana 46542-2000 USA
Phone (574) 658-4101 Fax (877) 730-8825
Email: choretime@choretime.com
Internet: www.choretime.com