54" Galvanized Hyflo® Fan
Installation & Operator's Instruction Manual

Thank You The employees of CTB Inc. would like to thank you for your recent Chore-Time purchase. If a problem should arise, your Chore-Time distributor can supply the necessary information to help you.

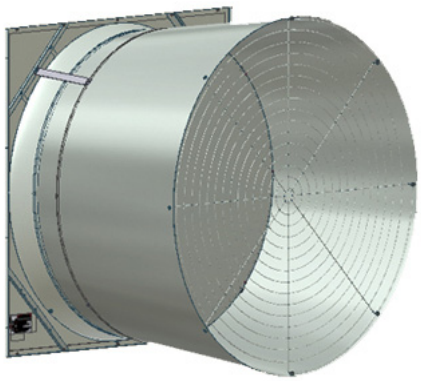

2333-008

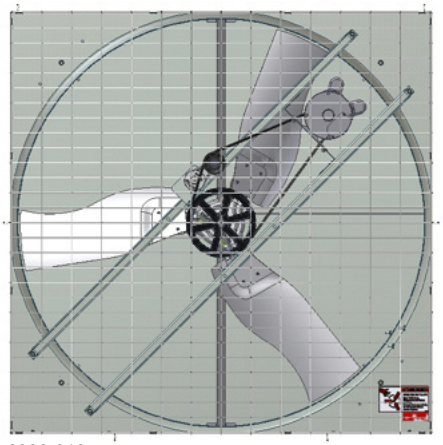

2333-010

Performance Data

						at .10" w.c. Static Pressure			
Fan Part No.	**Bess Lab Test No.**	**Nominal RPM**	**Voltage**	**Phase**	**Hz**	**CFM**	**CFM/W**	**Amps @230V**	**Starting Amps**
52157-21	09080	559	230	1	60	28900	19.4	6.6	36
52157-22	09081	566	230	1	60	25800	22.0	5.2	28
52157-41	09083	556	230/460	3	60	28900	19.9	4.5	40/20
52157-42	09082	562	230/460	3	60	25500	22.1	3.9	40/20
52157-51	09084	546	200-230/380-460	3	50	28200	19.9	5.0	39-46/19.5-23
52157-52	09085	553	200-230/380-460	3	50	25200	22.2	4.4	39-46/18.5-23

Operating static pressure should be less than 0.15 inches [3.81mm] water column.

The Fan Inlet and exhaust must be kept clear of obstructions. Failure to keep the Fan air-flow path clear of obstructions could cause loss of Fan performance and Fan damage.

Safety Information

Carefully read all safety messages in this manual and on your equipment safety signs. Follow recommended precautions and safe operating practices. Keep safety signs in good condition. Replace missing or damaged safety signs.

DANGER: Electrical Hazard



Disconnect electrical power before inspecting or servicing equipment. Ground all electrical equipment for safety. All electrical wiring must be done by a qualified electrician in accordance with local and national electric codes. Ground all non-current carrying metal parts to guard against electrical shock. With the exception of motor overload protection, electrical disconnects and over current protection are not supplied with the equipment.

DANGER: Rotating Fan Blade



Keep Hands away. Disconnect power before servicing. Fan may start automatically. Do not operate the Fan without the screens in place. Disregard to these things will cause serious injury including death.

Warranty

CTB, Inc., ("Chore-Time"), warrants each new CHORE-TIME® product manufactured by it to be free from defects in material or workmanship for one (1) year from and after the date of initial installation by or for the original purchaser. If such a defect is found by Chore-Time to exist within the one-year period, Chore-Time will, at its option, (a) repair or replace such product free of charge, F.O.B. the factory of manufacture, or (b) refund to the original purchaser the original purchase price, in lieu of such repair or replacement. Labor costs associated with the replacement or repair of the product are not covered by the Manufacturer.

Conditions and Limitations

1. The product must be installed by and operated in accordance with the instructions published by the **Manufacturer or Warranty will be void**.
2. Warranty is void if **all components** of the system are not original equipment supplied by the **Manufacturer**.
3. This product must be purchased from and installed by an authorized distributor or certified representative thereof or the Warranty will be void.
4. "Malfunctions or failure resulting from misuse, abuse, mismanagement, negligence, alteration, accident, or lack of proper maintenance, or from lightning strikes, electrical power surges or interruption of electricity shall not be considered defects under the Warranty. Corrosion, material deterioration and/or equipment malfunction caused by or consistent with excessive additions or application of chemicals, minerals, sediments or other foreign elements with the product shall not be considered defects under the Warranty."
5. This Warranty applies only to systems for the care of poultry and livestock. Other applications in industry or commerce are not covered by this Warranty.

Chore-Time shall not be liable for any **Consequential or Special Damage** which any purchaser may suffer or claim to suffer as a result of any defect in the product. **"Consequential"** or **"Special Damages"** *as used herein include, but are not limited to, lost or damaged products or goods, costs of transportation, lost sales, lost orders, lost income, increased overhead, labor and incidental costs and operational inefficiencies.*

THIS WARRANTY CONSTITUTES THE MANUFACTURER'S ENTIRE AND SOLE WARRANTY AND THIS MANUFACTURER DISCLAIMS ANY AND ALL OTHER WARRANTIES, INCLUDING, BUT NOT LIMITED TO, EXPRESS AND IMPLIED WARRANTIES AS TO MERCHANTABILITY, FITNESS FOR PARTICULAR PURPOSES SOLD AND DESCRIPTION OR QUALITY OF THE PRODUCT FURNISHED HEREUNDER.

Chore-Time Distributors are not authorized to modify or extend the terms and conditions of this Warranty in any manner or to offer or grant any other warranties for CHORE-TIME® products in addition to those terms expressly stated above. An officer of CTB, Inc. must authorize any exceptions to this Warranty in writing. Chore-Time reserves the right to change models and specifications at any time without notice or obligation to improve previous models.

Tools Needed and Supplies

3/8" socket	1/4" nut driver
½" socket or wrench	Motor power cord
Side cutters	Wire nuts / terminals
Level	Optional screw hook installation tool (CTB part number 13150-1)
5/32" allen wrench (unassembled)	Caulking

New Installation Planning

Framing

Planning the layout of the spacing between Fans is very important. Spacing too close together will cause interference between the discharge Cones.

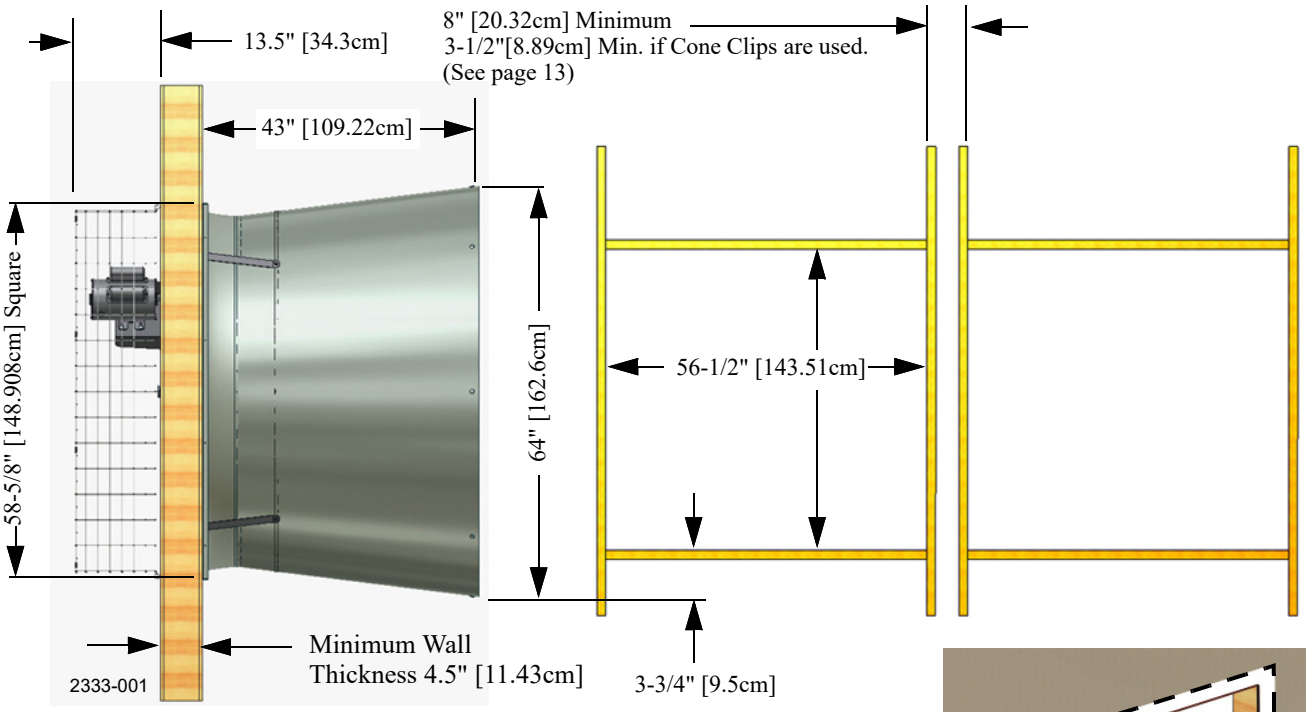

Important! Fan mounting surface must be flat.

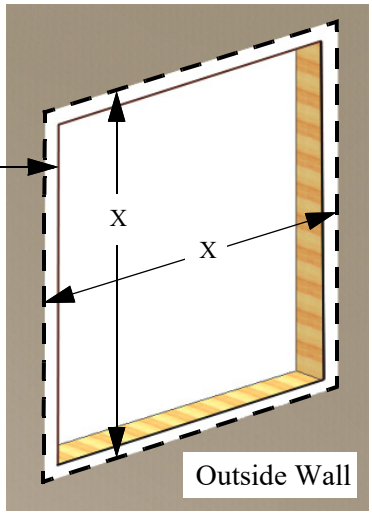

"X" =58-3/4" [149.23cm] Minimum
Flat Mounting Surface Required

Minimum Rough Opening Size

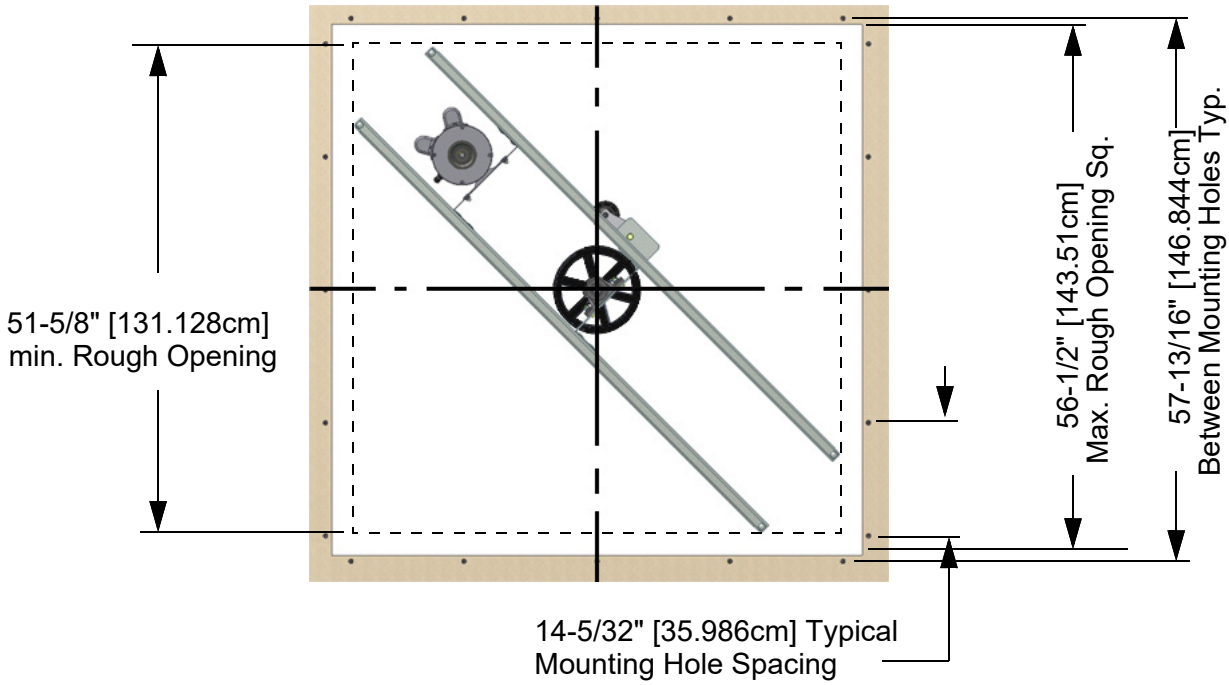

Installation

Attaching Fan Posts (For bulk packed Fans only)

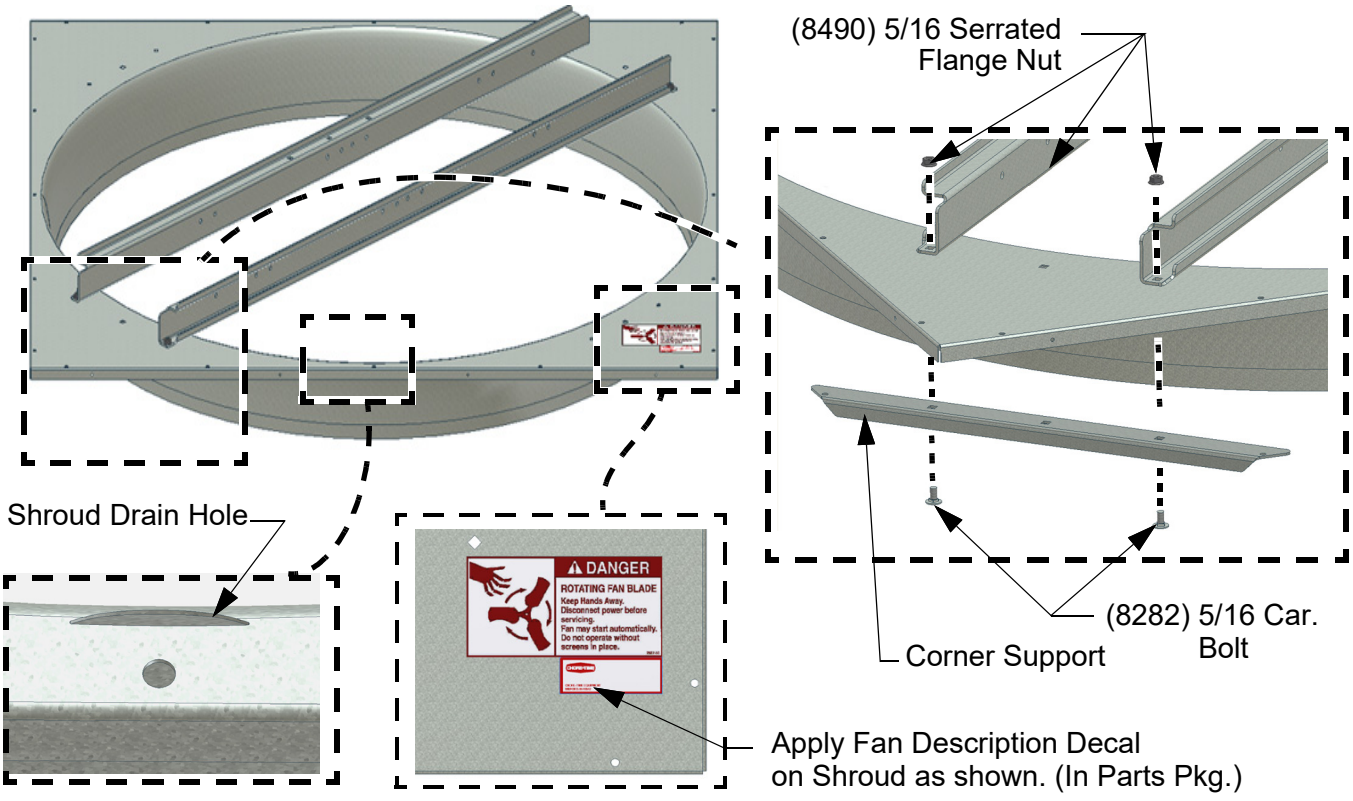

Bottom Shelf Installation

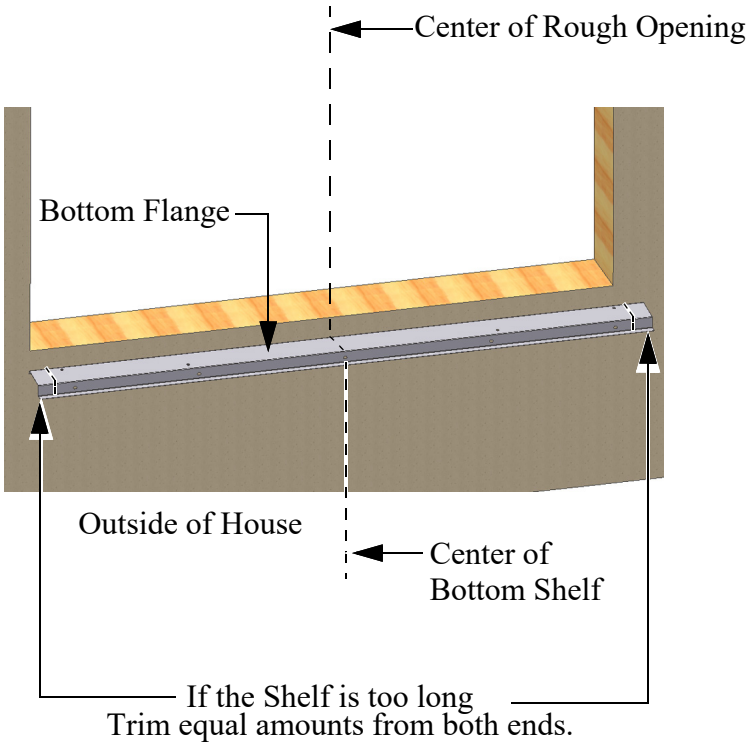

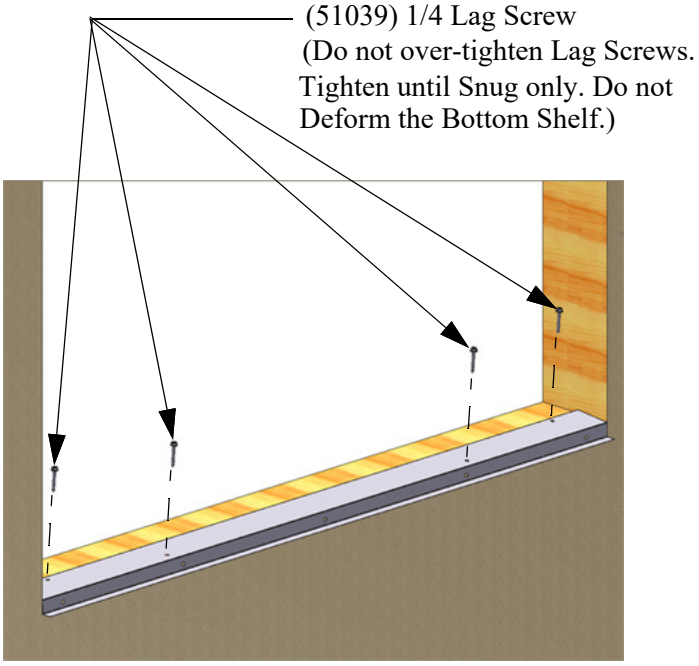

Attaching Fan to the Wall

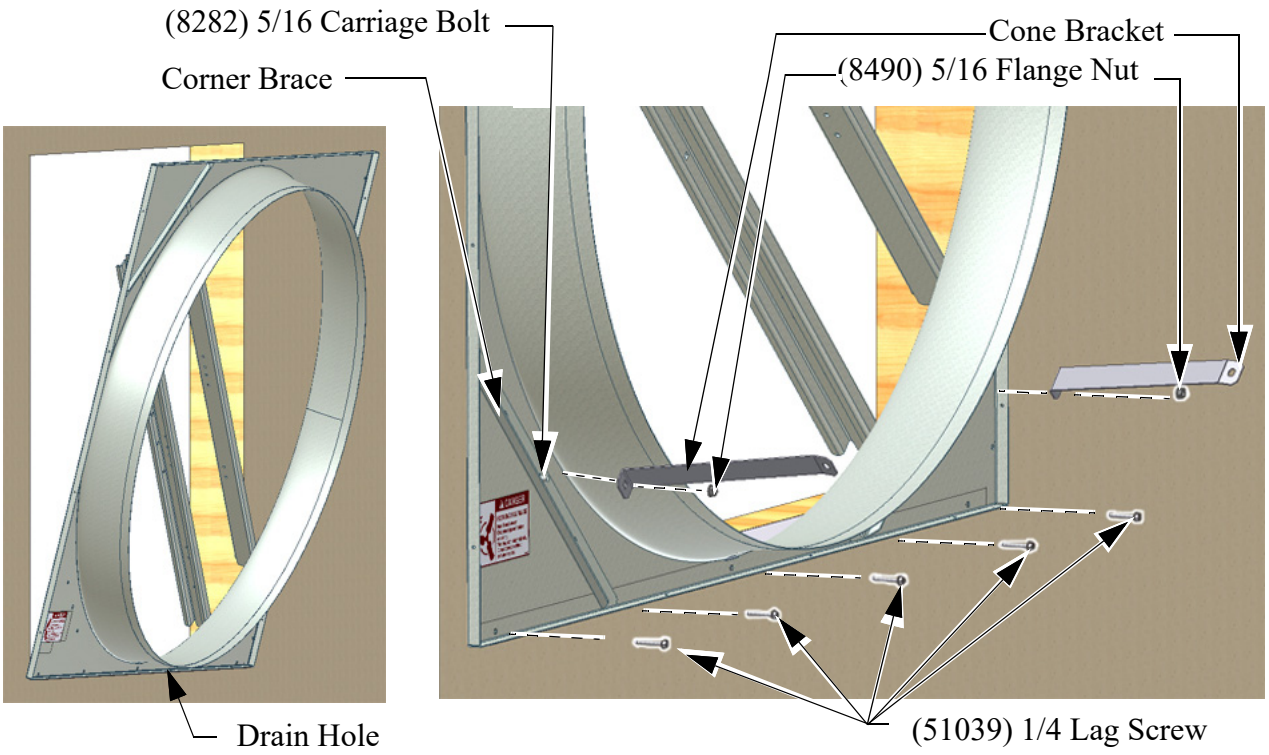

Orient the Fan with the Drain hole at the bottom and set the Fan on the Bottom Shelf. Line up the holes in the Shroud with the holes in the Bottom Shelf.

Attach the Fan to the Bottom Shelf and Wall with Lag Screws as shown. Use the Lags to secure Corner Braces at each Corner and Carriage Bolts (8282) and Flange Nuts (8490) to attach Cone Brackets **(See also below).**

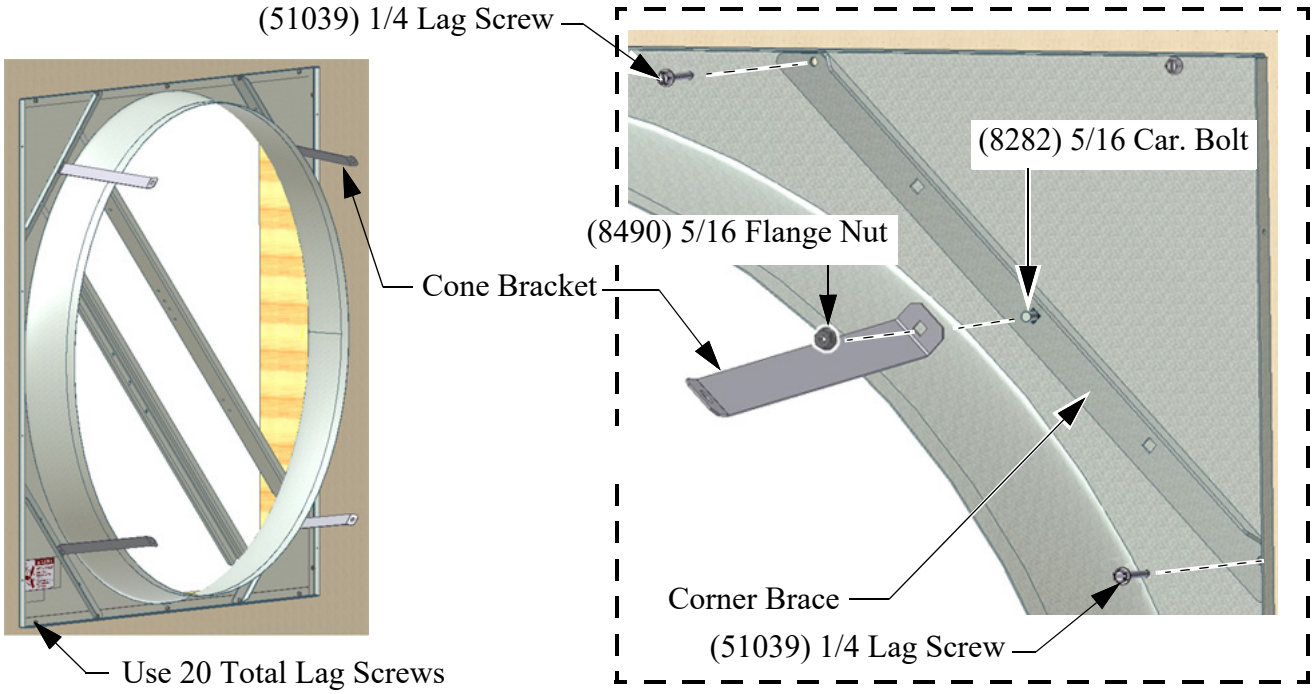

Use 5/16" Carriage Bolts (8282) and Flange Nuts (8490) to attach Corner Brackets as shown. **(All four Corners)**.

Attaching Motor Support Bracket

Individually Packed Fan Models

Rotate the Motor Support Bracket into the upright position by removing the **Upper** Carriage Bolt and Nut**,** and loosening the **Lower** Bolt and Nut.

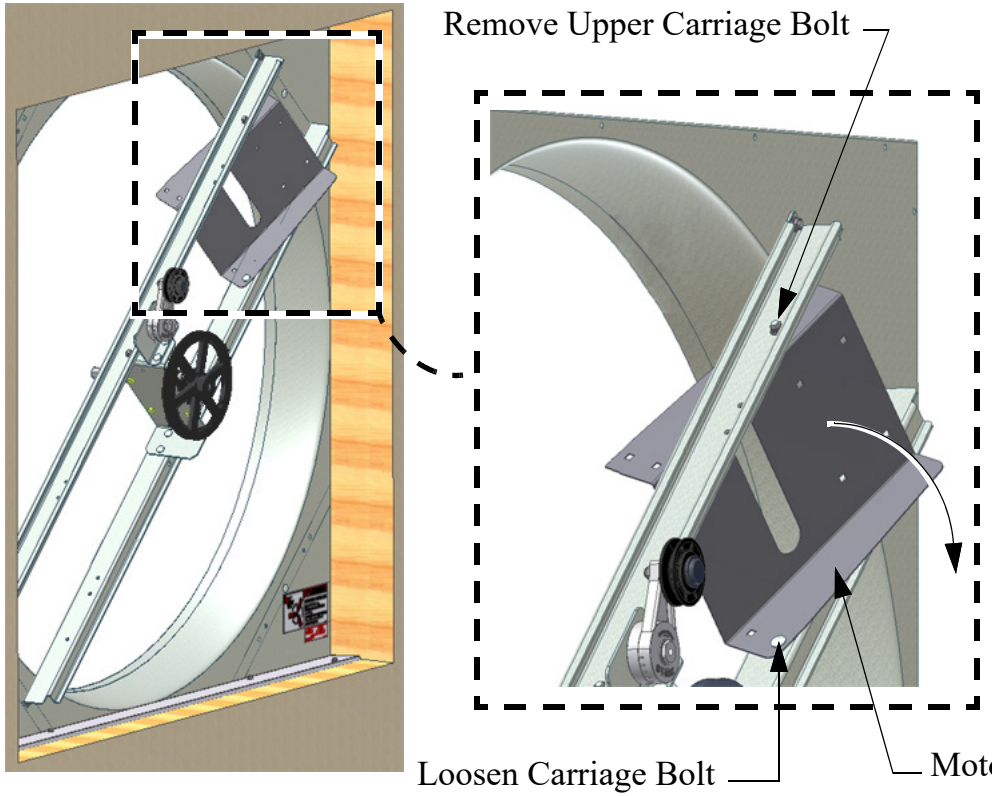

Attach the Motor Support Bracket to the Posts with 5/16 Carriage Bolts (8282) and 5/16 Flange Nuts (8490) .

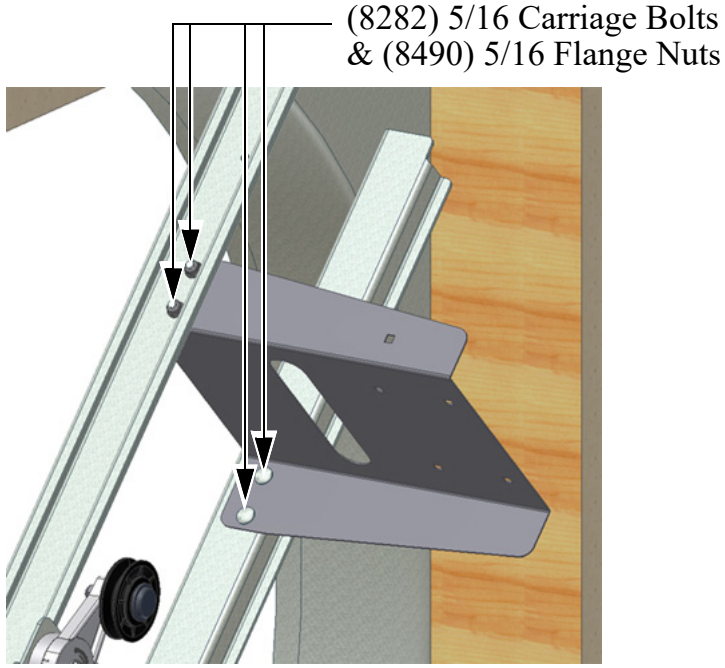

Attaching Drive Assembly (Bulk Packed Fans only)

Remove the Drive Assembly from the box and attach to the Posts with (4) 5/16 Carriage Bolts and (4) 5/16 Flange Nuts. *Note that the Nuts go outside the Posts*.

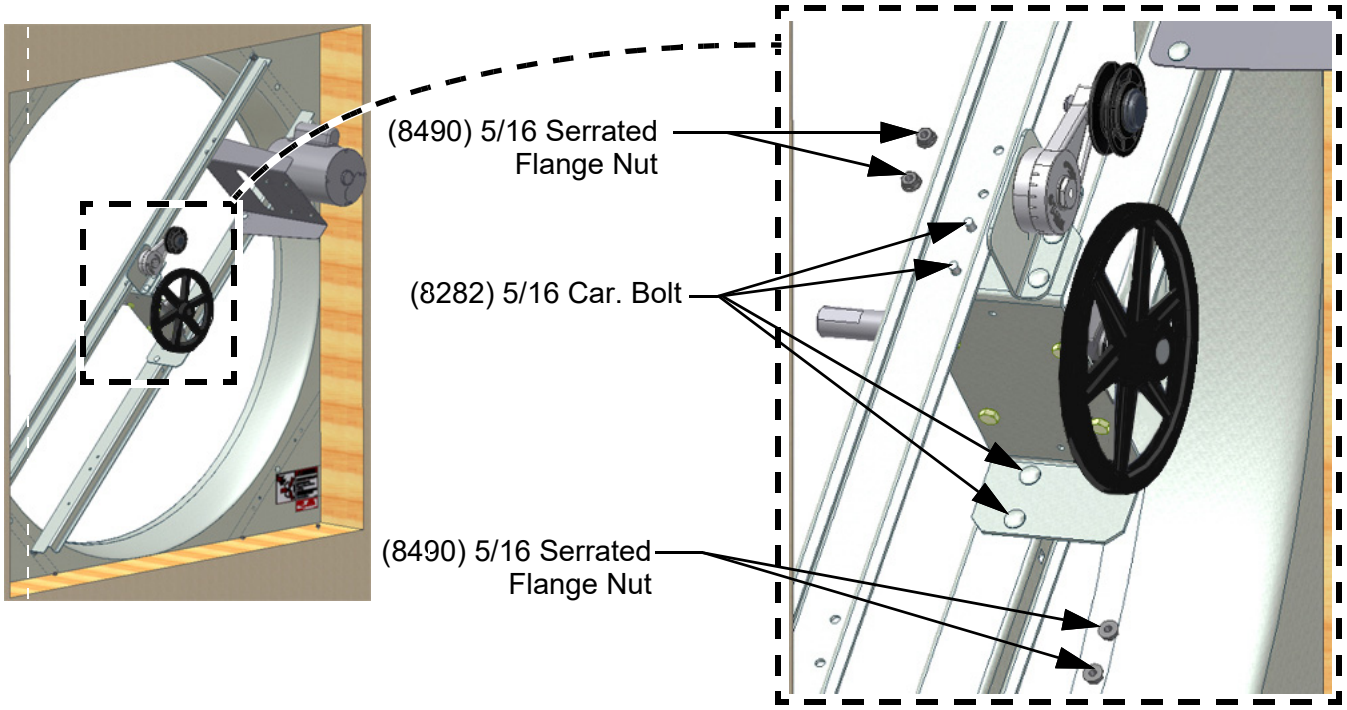

Attaching the Fan Blade (Bulk Packed Fans Only)

Apply Anti-Seize (included in parts package) to the Driven Shaft. Install the Fan Blade Flush with the end of the Shaft as shown with a 1/8 Key (Included in parts package)

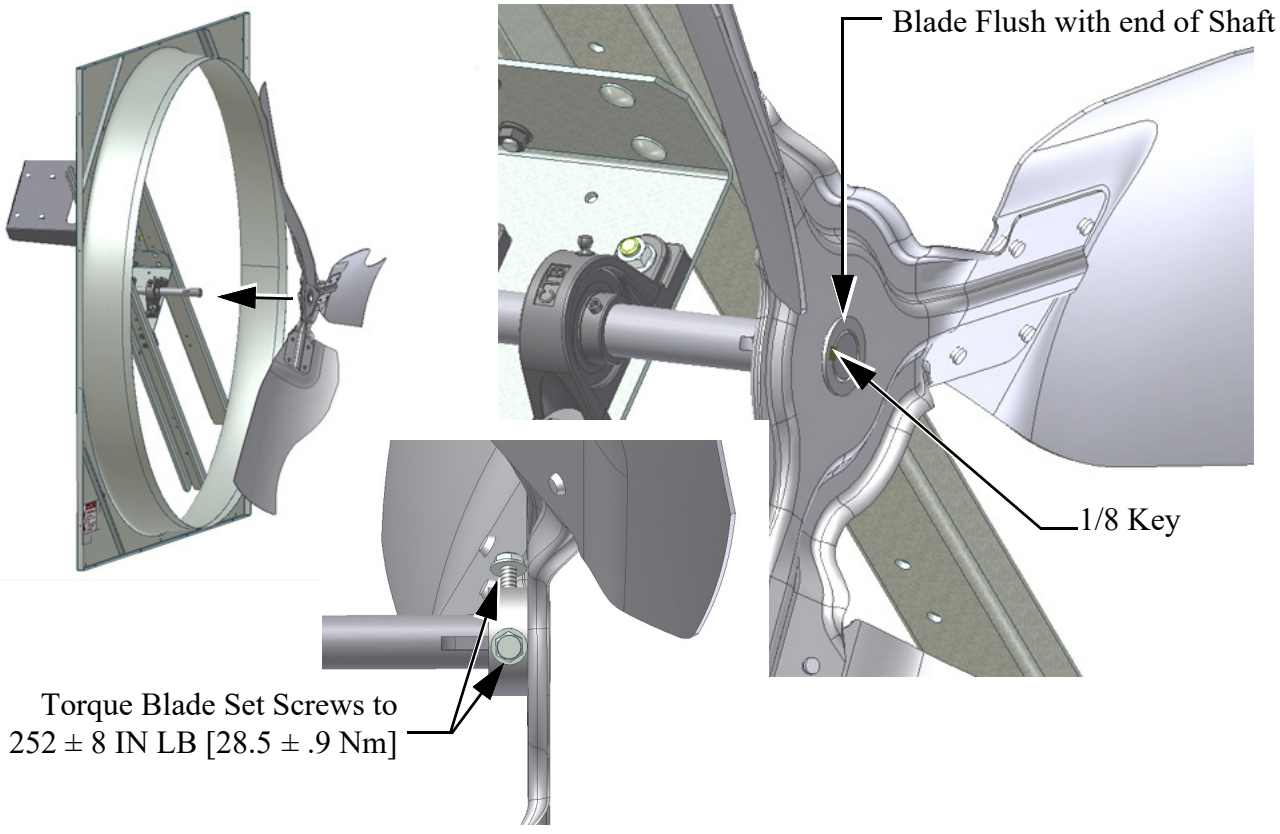

Attaching the Motor

Remove the Motor from the Crate and attach it to the Motor Support Bracket with (4) 5/16 Carriage Bolts and (4) 5/16 Flange Nuts **as shown**.

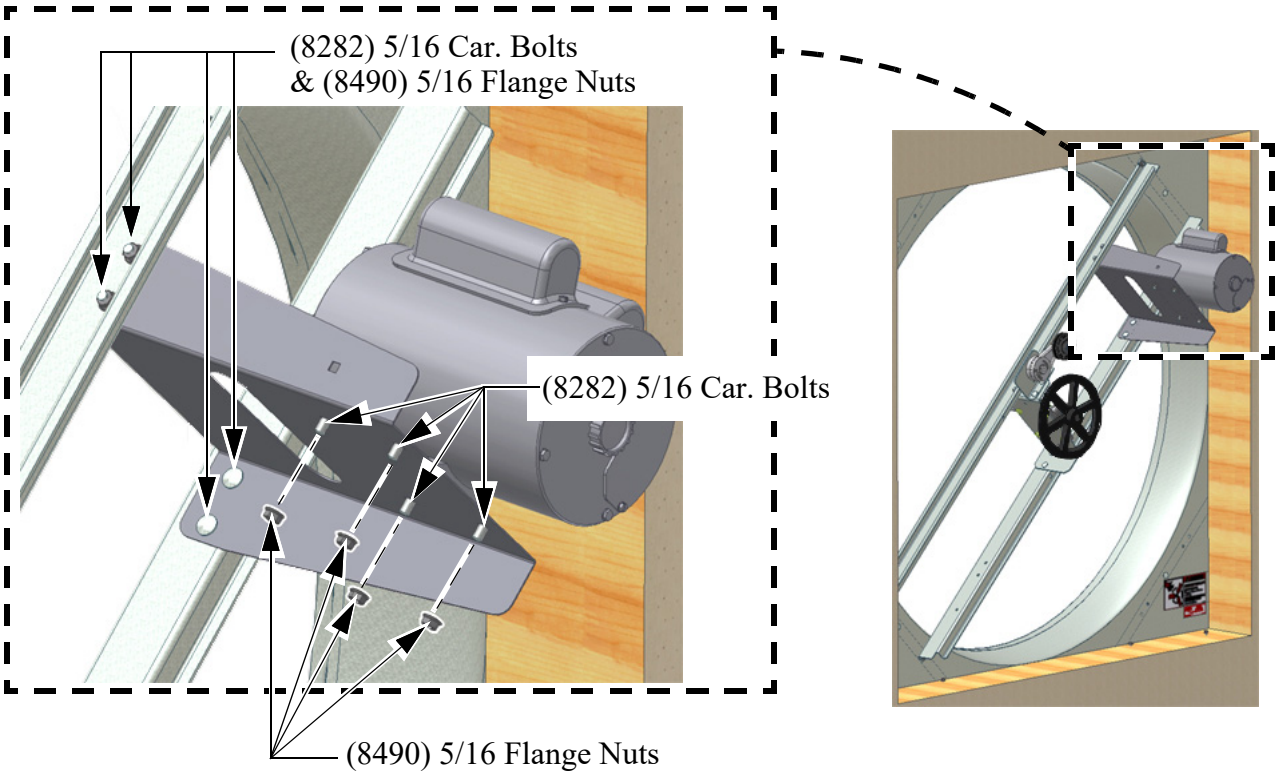

Motor Sheave Installation (Bulk Packed Fans Only)

Align Motor Sheave with the Sheave on the Tensioner and attach **as shown.**

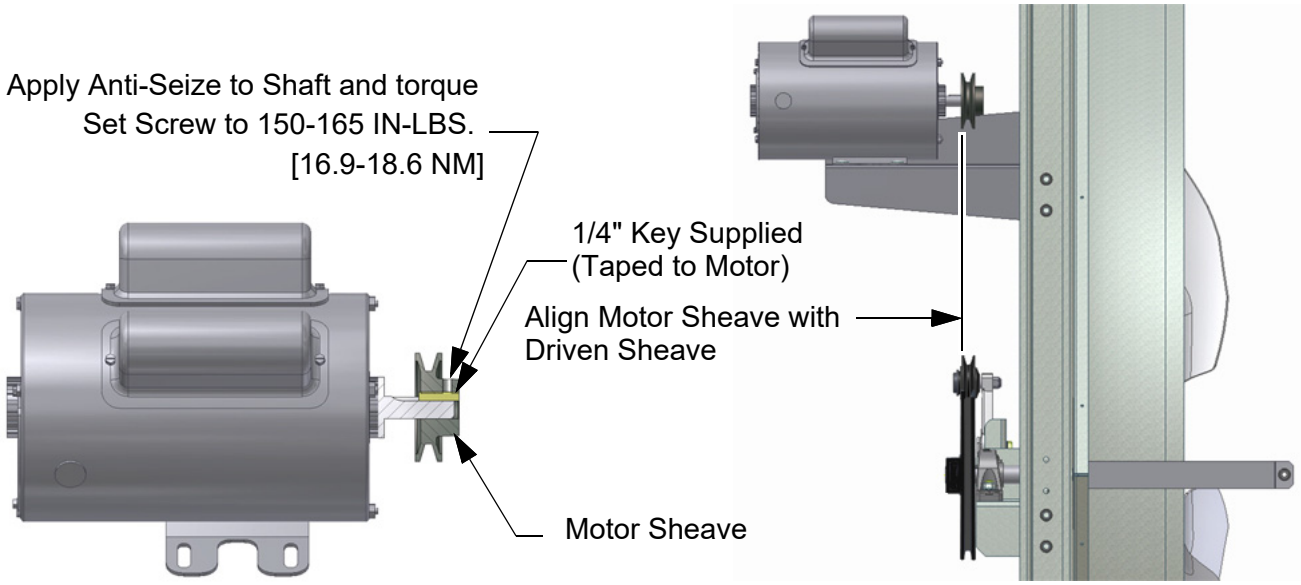

Belt Installation

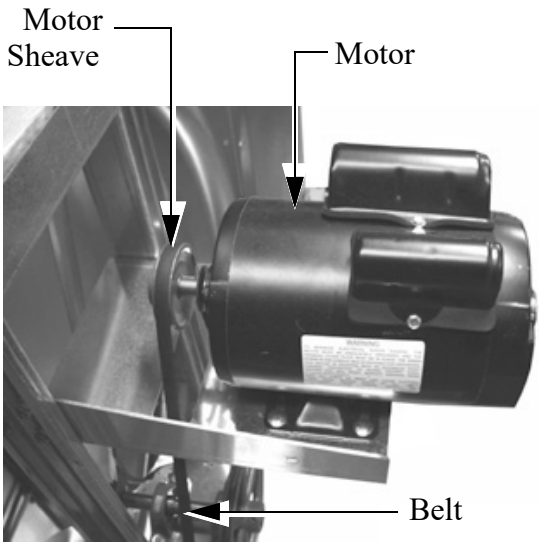

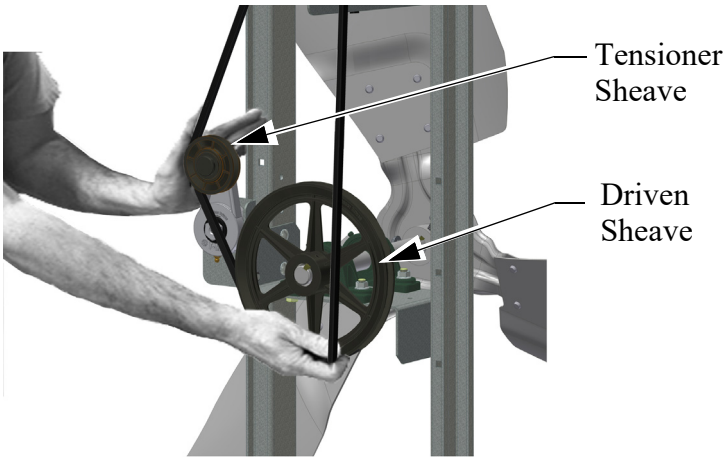

Caution: Make sure that the Belt does not Rub the Motor Bracket.

Cone Assembly and Installation

Step 1: Lay a Cone Panel down (Drain Tab at the bottom and slots to the left) and Prop the end up (Slotted end) with a 2 x 4 board.

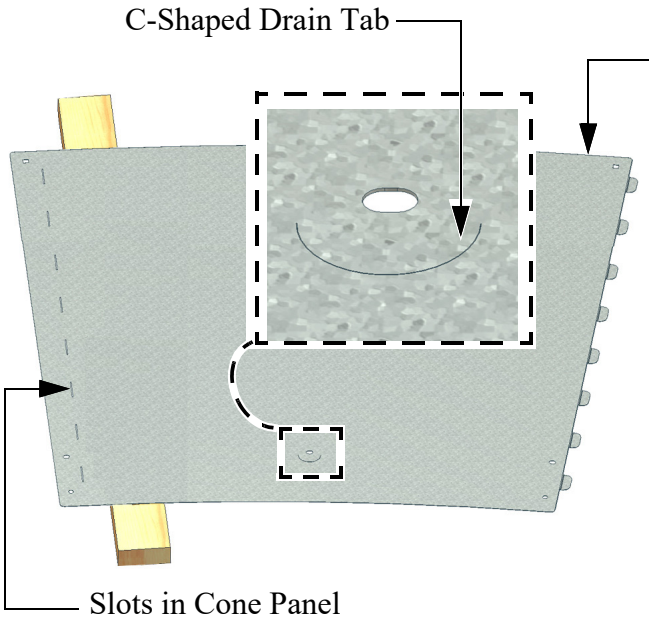

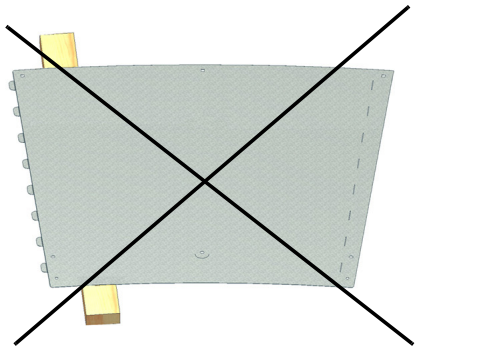

Wrong! Cone Panel is upside down

Step 2: Insert the Tabs of a second Cone Panel into the slots of the 1st Panel and Lay it down locking the two Panels together.

Step 3: Repeat Step 2 until all four Cone Panels are locked together.

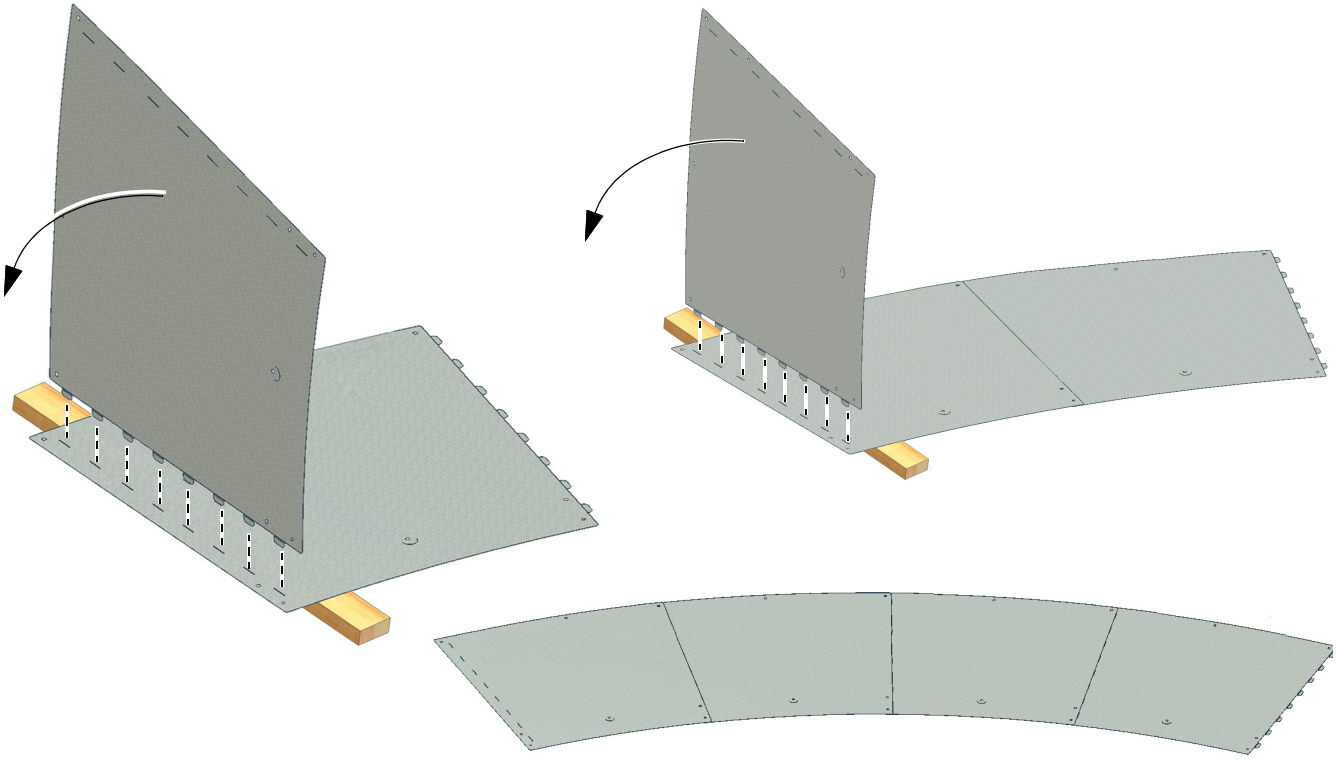

Step 4: Stand the Panels up on edge and curl the Panels around making a Cone shape with the smaller diameter up. Insert the Tabs of the last Panel into the Slots of the 1st and allow the Cone to take its shape.

Step 5: Fasten the Cone Panels together with (4) 5/16 x .5" Hex Bolts (1839) and Flange Nuts (8490). Thread bolts from inside the finished Cone. Do not tighten down the Nuts at this time. Leave the Nuts loose until the Cone is attached to the Fan.



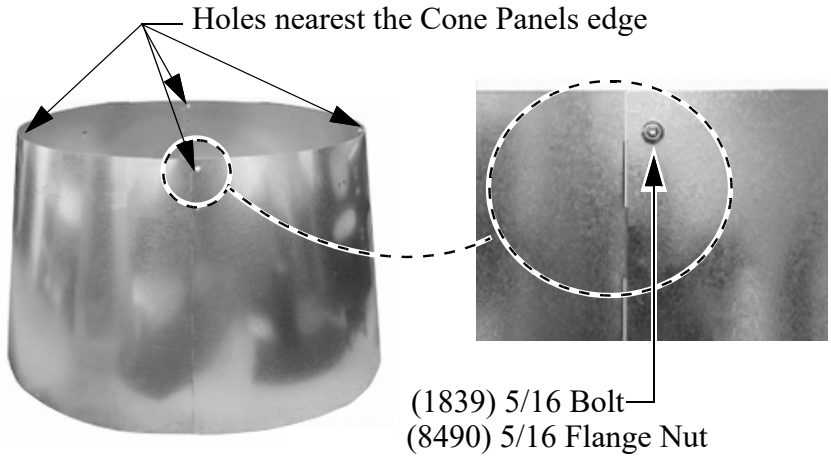

Installing Door Assembly

Step 1: Remove the Tape holding the Nylon Cable to the Door

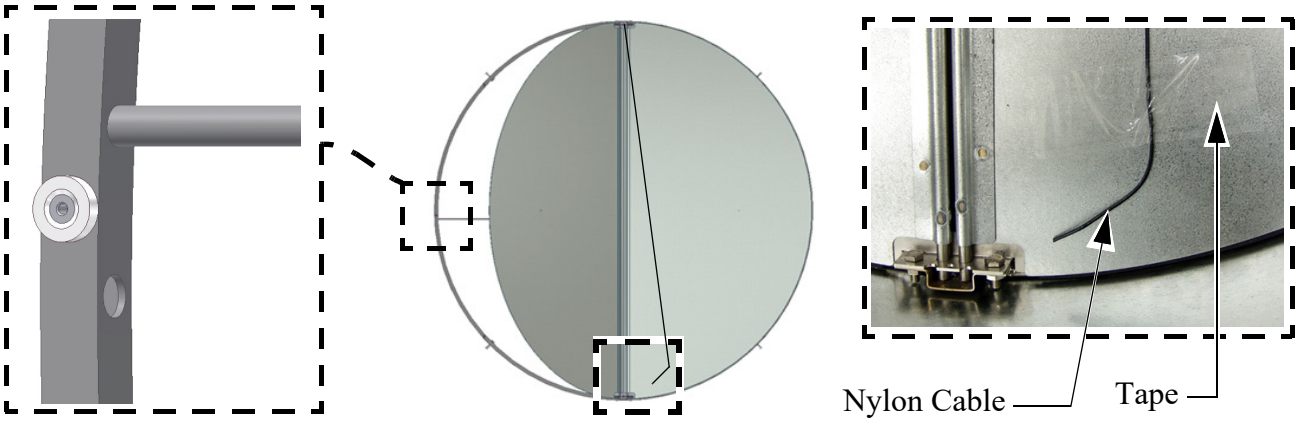

Step 2: Line up the Four threaded holes in the Door Ring with the holes in the Cone and thread (4) 5/16 x 1-1/4" Bolts (2150) in until they are tight. Do not install Nuts at this time. These Bolts will be used later to attach the Cone Brackets to the Cone Assembly.

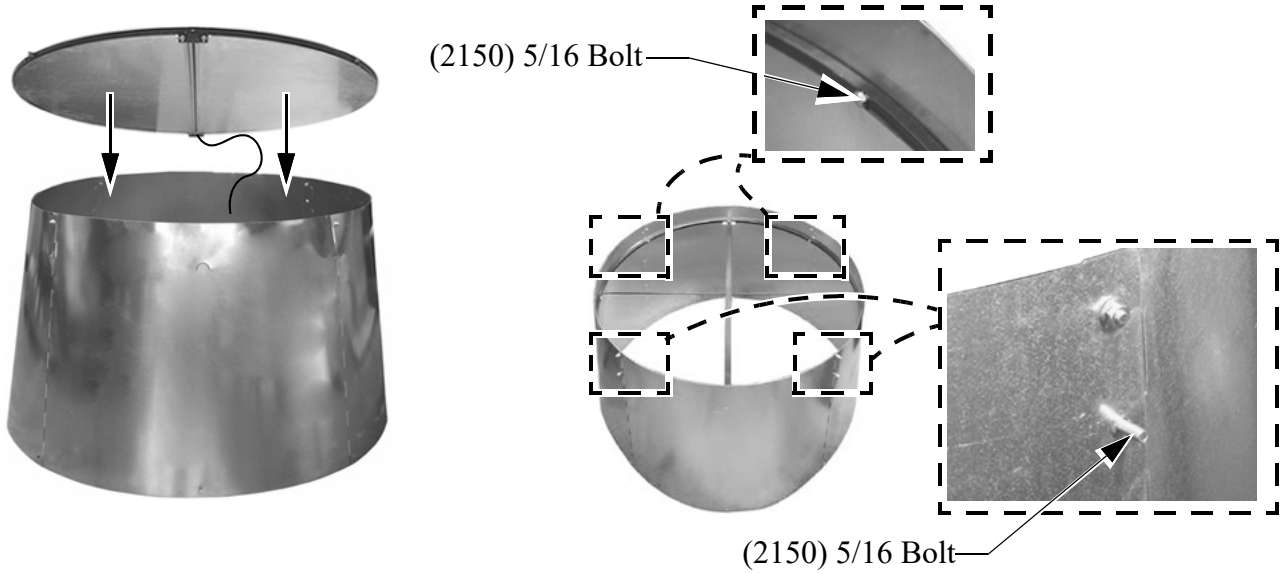

Step 3: Use (2) 5/16 x 1-1/4" Bolts (2150) and (2) 5/16 Flange Nuts (8490) to attach the Ring to the Cone using the holes located on both sides near the Door Center Brace as shown. The Nuts go outside the Cone.

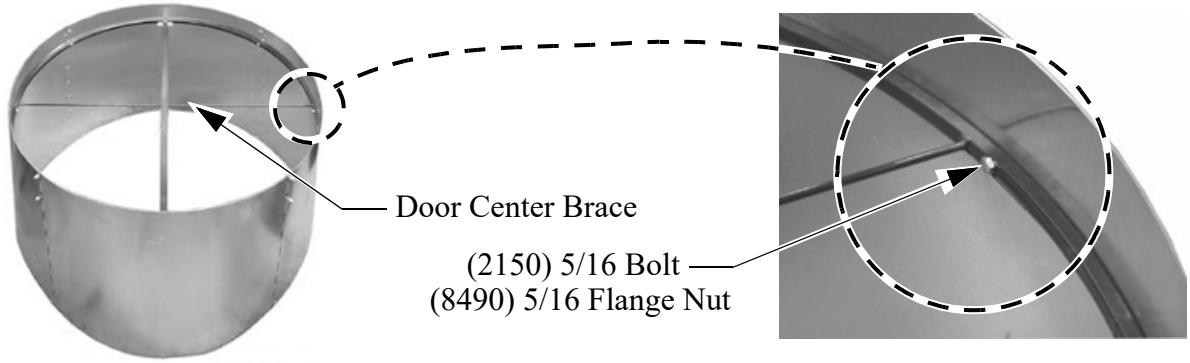

Attaching the Door Stop Cable (Nylon Cable) and Grill.

Step 1: Line up the Grill Eyehooks with the holes in the Cone. Thread the free end of the Nylon Cable through the bottom Grill Eyehook until it is flush with the Cone and secure it with a 5/16-18 Carriage Bolt (8282) and Flange Nut (8490) as shown.

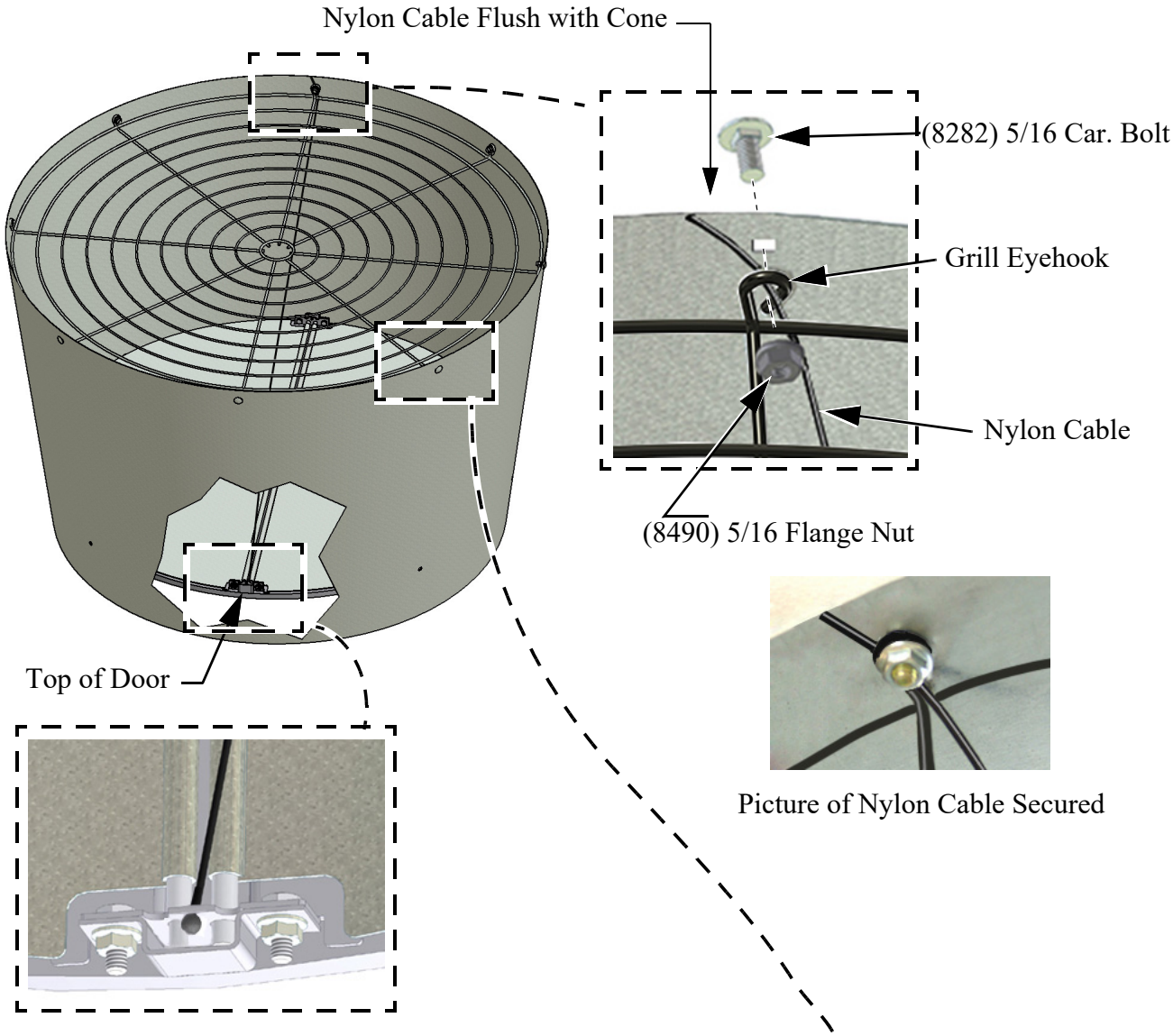

Picture of Nylon Cable Secured

Step 2: Use 5/16 Carriage Bolts (8282) and Flange Nuts (8490) to fasten Grill to Cone at remaining 7 locations.

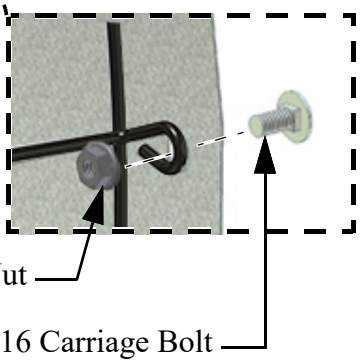

Attaching Cone

Mounting the Cone and Door Assembly on the Fan requires at least two people. Pick up and orient the Cone with the Door Stop Cable attached at the top and rest the Cone on top of the Fan Orifice **as shown**. Attach the top of the Cone to the Cone Brackets with the Bolts that were previously threaded through the Ring and Cone and secure with 5/16 Flange Nuts (8490). Only hand tighten the Nuts at this time. Working around the Fan Orifice from inside the fan, in a circular motion Slide the Cone over the Fan Orifice. The Cone will Fit snug. Use the Bolts previously threaded through the Ring and Cone and the 5/16 Flange Nuts (8490) to secure the bottom of the Cone to the Fan **as shown**. Use a Level and rotate the Cone until the Door center rail is Vertical **(See Figure)**. Now tighten all Hardware.

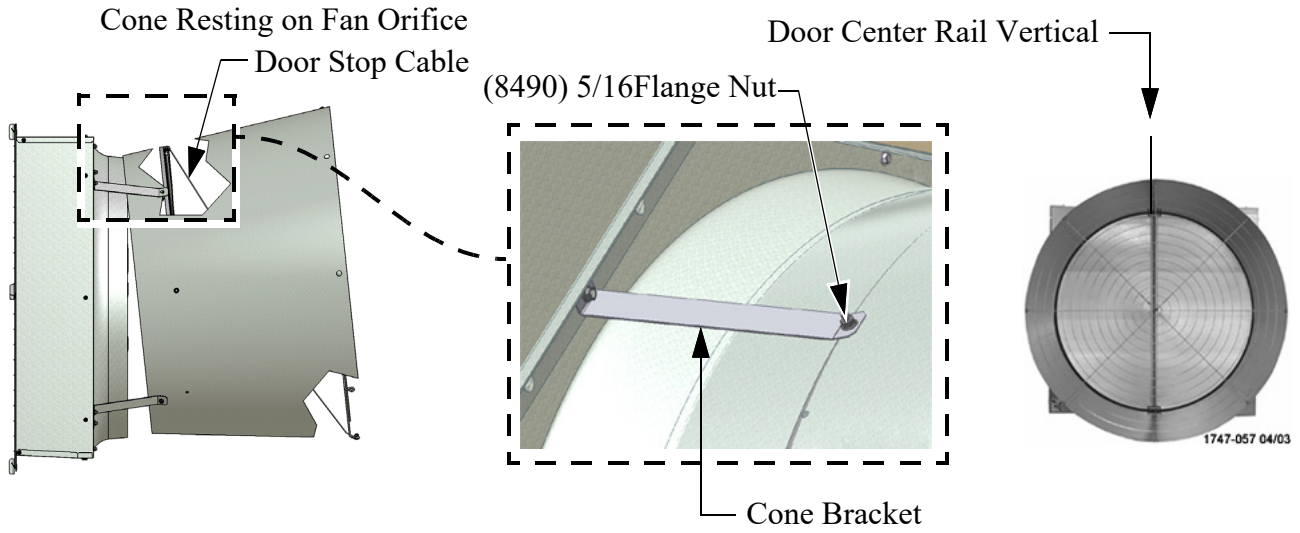

If the Cone will not slide over the Shroud Orifice easily, remove the three Flange Nuts from the Grill closest to the troubled area and push in on the Cone as shown. Fasten the Cone to the Bottom Cone Brackets with Flange Nuts (8490).

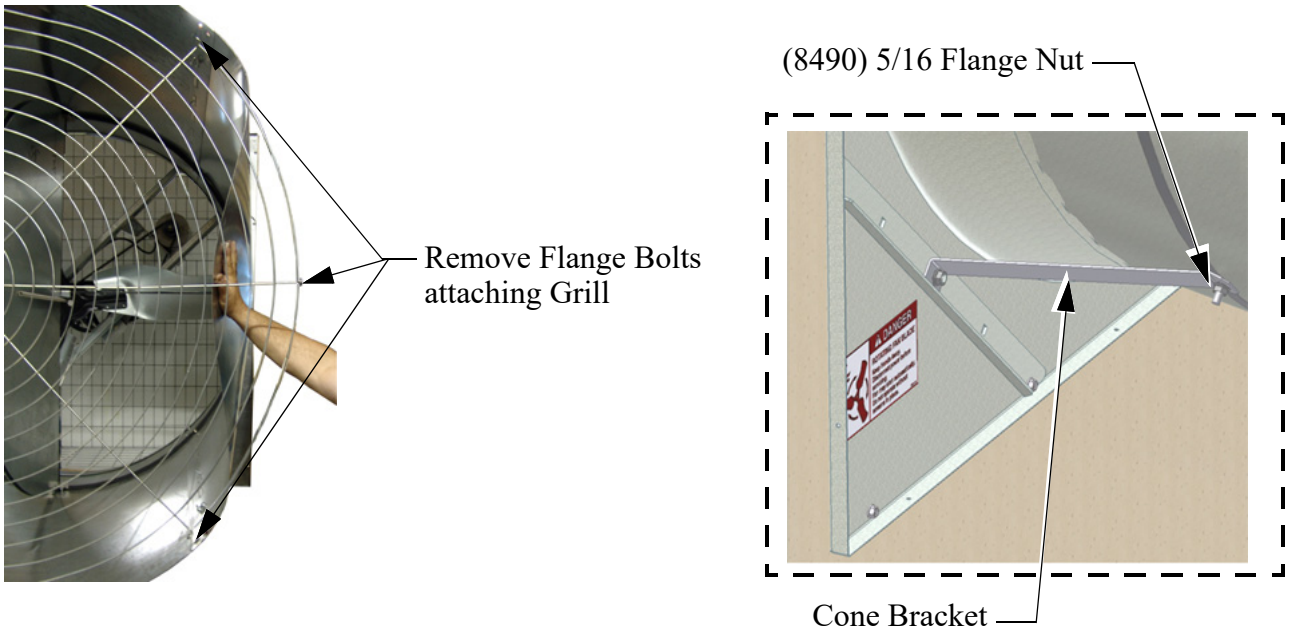

Tighten the (4) 5/16 Flange Nuts that were installed to hold the Cone Panels together on page 11.

Installing Cone if Fan Spacing is 60-1/2" to 64-1/2" on Center

Step 1: Cut the Grill wire.

Step 2: Push the Cone and Grill Wire over and use a Cable Clamp to hold in place.

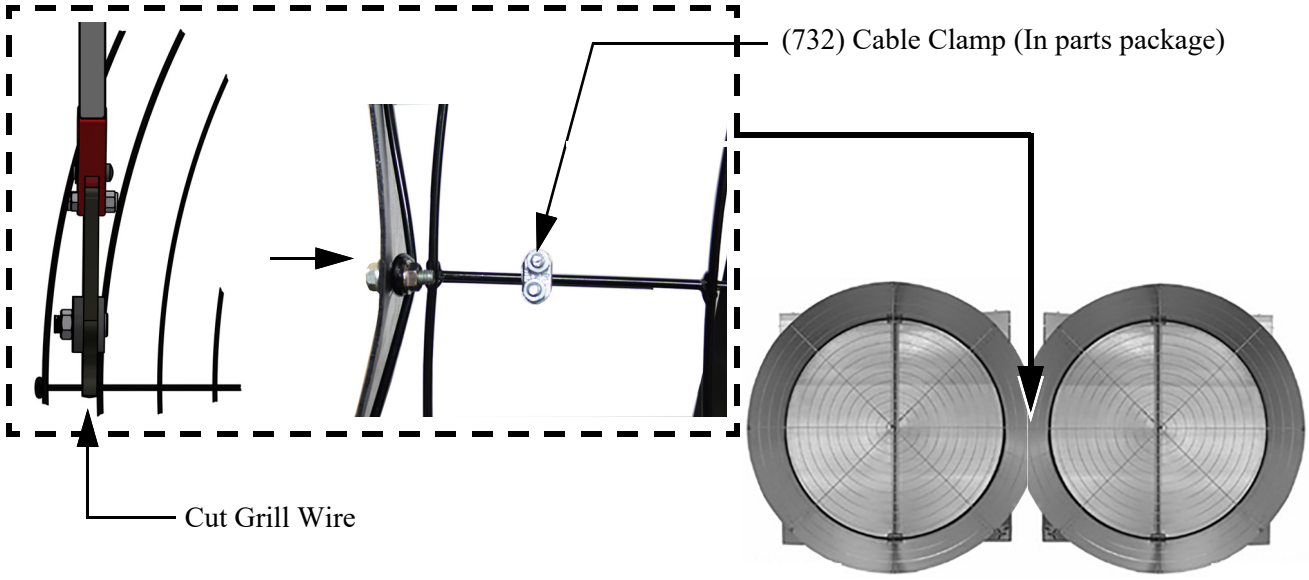

Door Spring Assembly

Step 1: Attach the Spring Mounting Bracket.

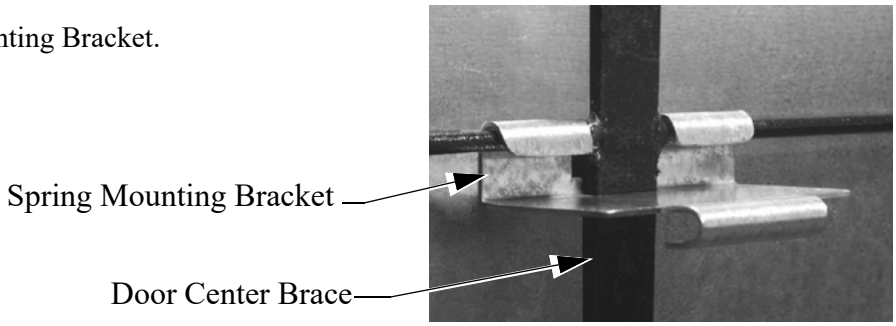

Step 2: Attach the Springs as shown.

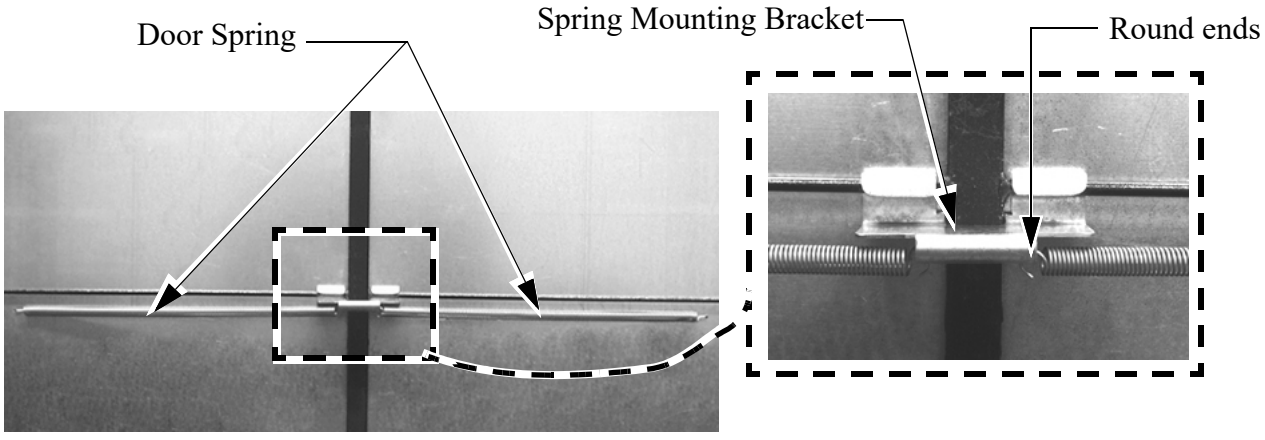

Drain Tab

The Fan Cone is designed with a C-Shaped Drain Tab located at the back of the Bottom Cone Panel. Use a screw driver to push the Drain Tab out as shown

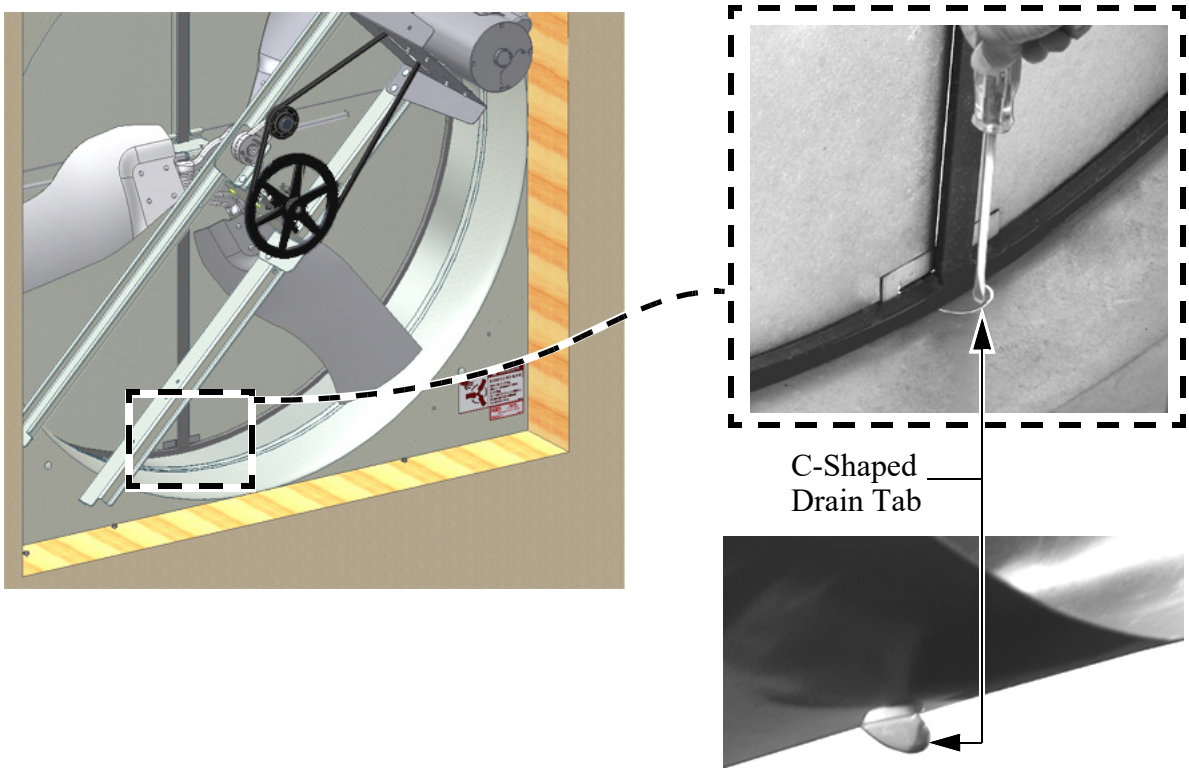

Blade Tip Clearance

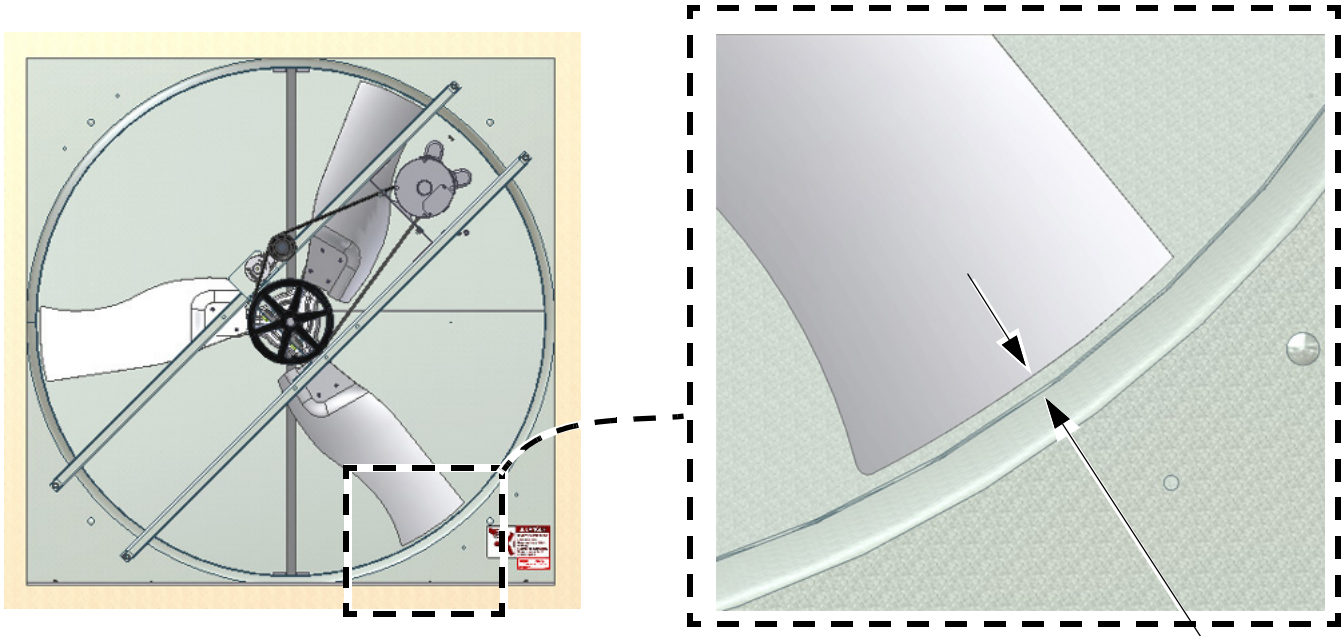

Motor Wiring

1. Check that the electrical power being supplied to the Fan matches the electrical Specifications on the Fan and Motor Decals.
2. Remove the Motor Access Cover.
3. Install an electrical disconnect within reach of each Fan installed.
4. Connect the cord to the motor according to the wiring diagram on the motor. Verify that the motor is connected for counter clockwise rotation (viewing the back of the motor, opposite the shaft end.)
5. Follow local, state, and national electrical codes for wiring. Cut out one section of the Screen to route the cord out of the Fan: This will allow for the Screen to be removed without interfering with the Cord.
6. Attach the cord to the Wall using a Lag Screw and Cord Clip. Allow enough slack in the cord to form a "drip loop" for moisture to fall away from the cord and not into the motor

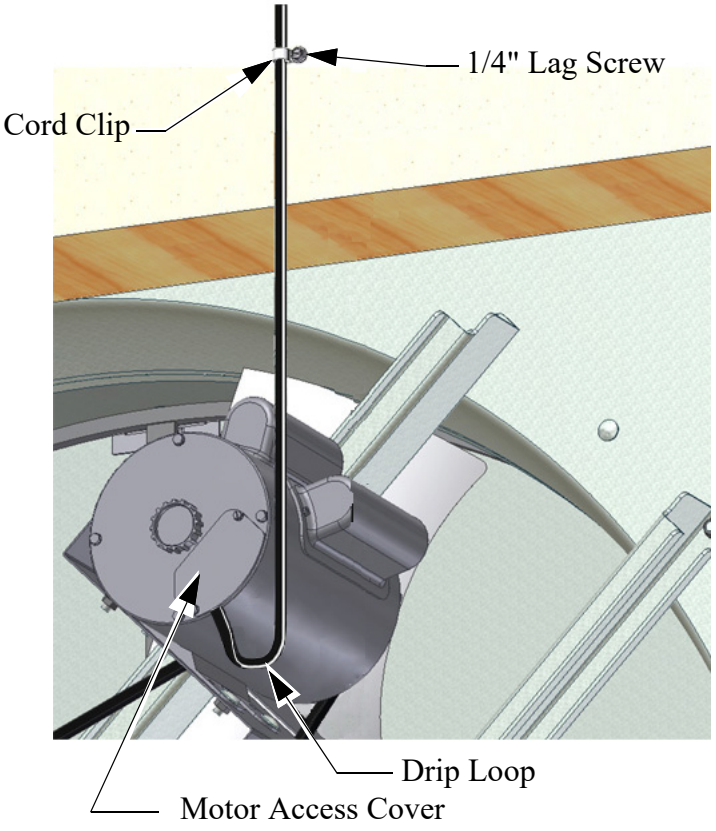

Caulking

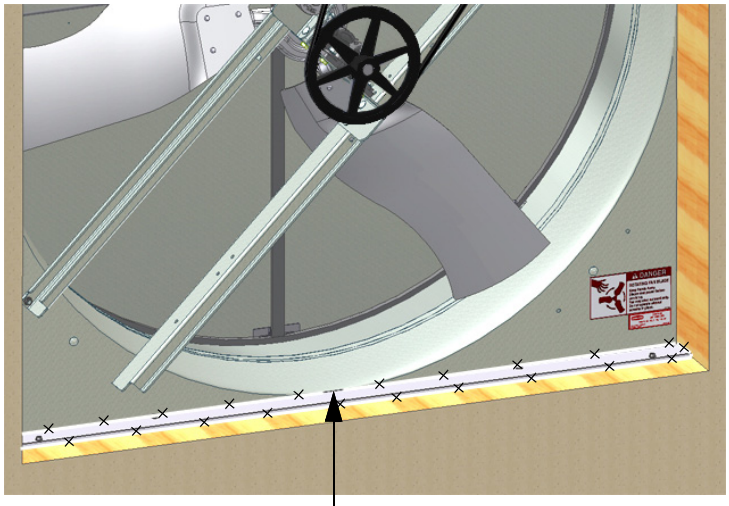

Shroud Drain Hole
(Do not Caulk Drain Hole Shut!)



Caulk all edges of the Bottom Shelf except for at Shroud Drain Hole location.

Assembling the screen

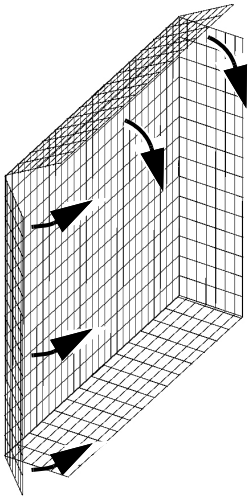

1. Fold the Screen Sides as shown.

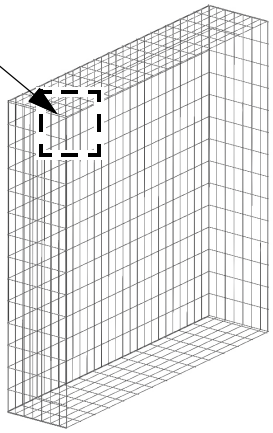

2. Install a spring (54480) **in the upper left corner** following steps A through D below. After Step D is complete go to step 3.

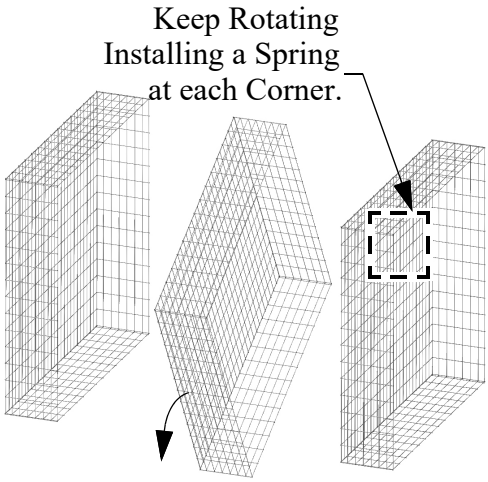

3. Rotate the Screen in the direction shown installing a Spring at a second corner. **Repeat for remaining Corners.**

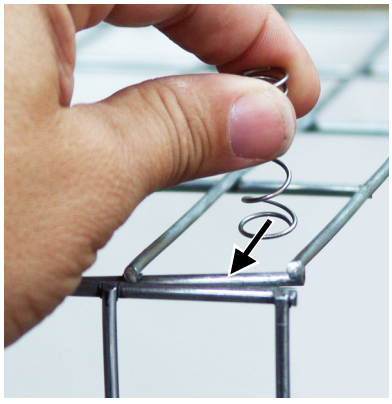

A) Slide a Spring (54480) over both Screen Panel Wires exactly as shown.

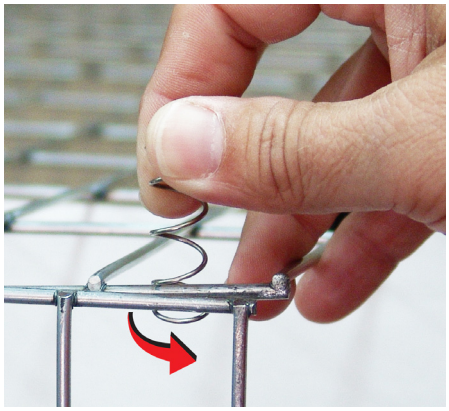

B) Rotate the Spring Counter-Clockwise until the end of the Spring snaps over the Side Panel Wire.

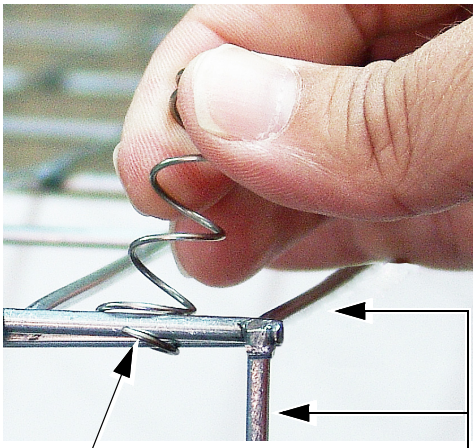

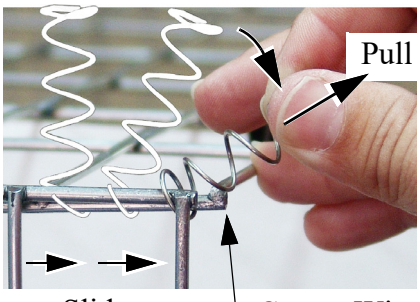

C) Slide and Pull Spring over Corner Panel Wire.

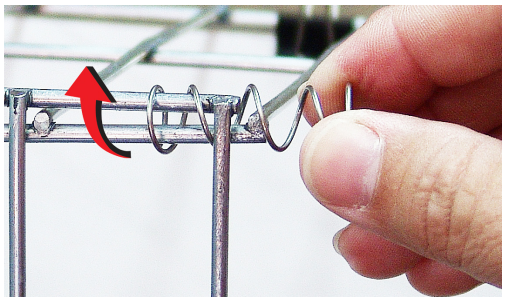

D) Twist Spring Clockwise until it is passed the outside wire and snapped firmly in place.

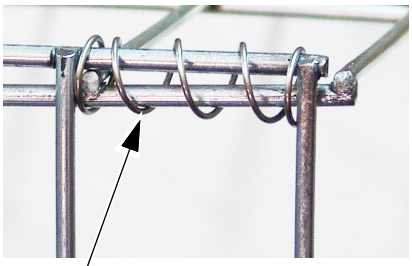

Installing Screen Hooks

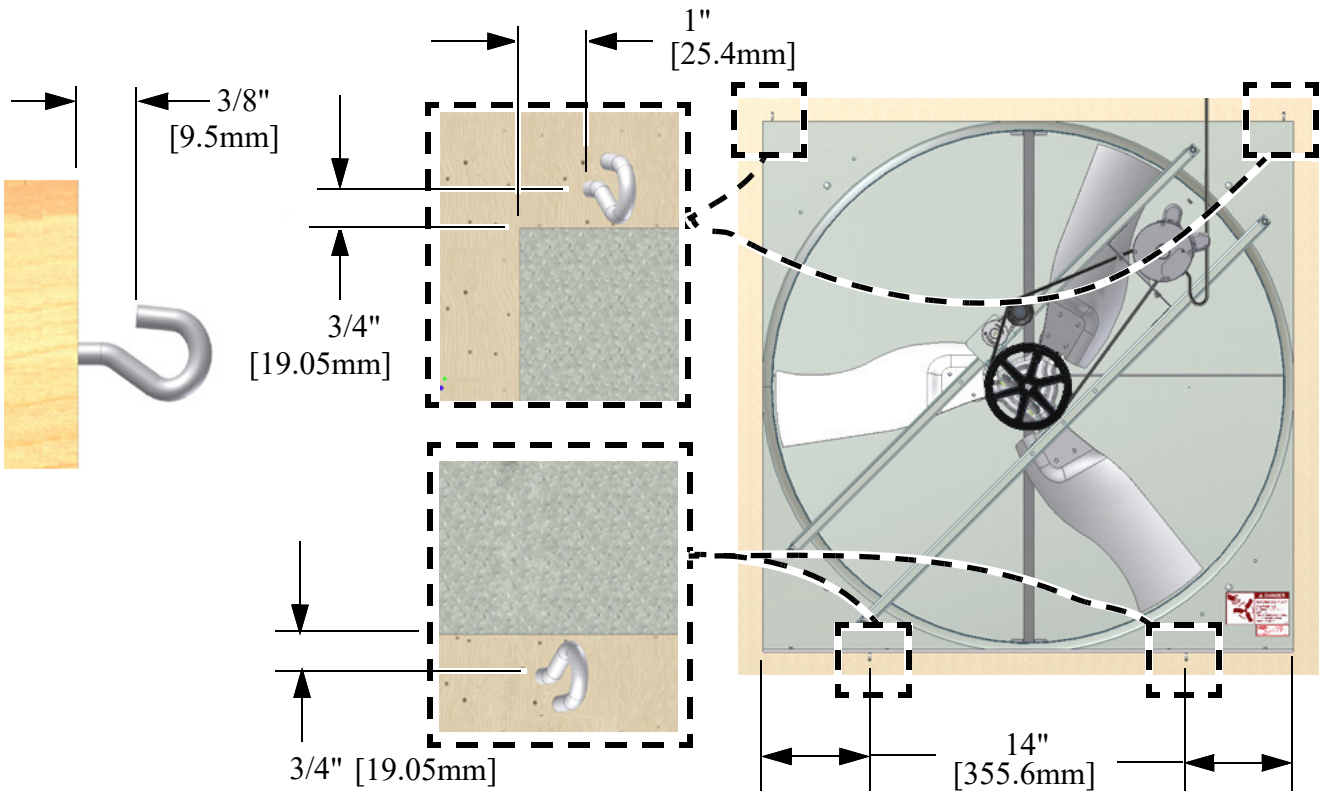

Installing the Screen

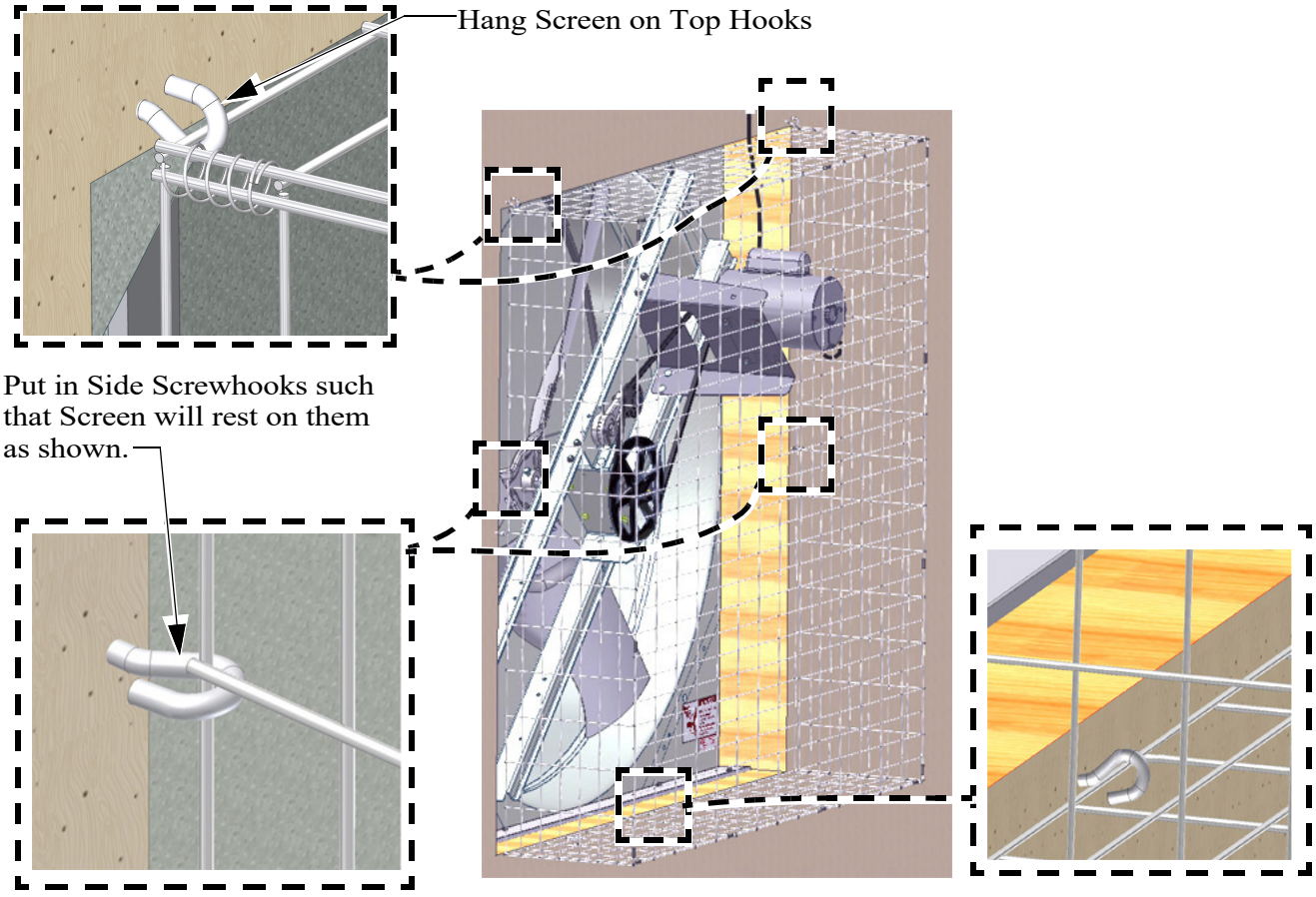

Maintenance

IMPORTANT! Disconnect Power Prior To Maintaining Or Cleaning The Fan. The fan may start automatically causing serious injury or death.

- Service and repair of fans should be done only by a qualified technician.
- Minimize contact of moisture or corrosive chemicals to the surfaces of the fan components to maximize fan life.
- After washing fans, operate fans long enough to remove moisture from all fan surfaces.
- Keep the fan clean for maximum life and best performance. **Do Not spray water on the Fan Shaft Bearings, the Belt Tensioner, or the Motor.**
- Periodically check the V-Belt and replace if necessary. A worn Belt will cause a substantial drop in Fan performance or it can break and cause Fan failure. If a Belt rides below the Sheave edge, replace the belt. **(See below)**

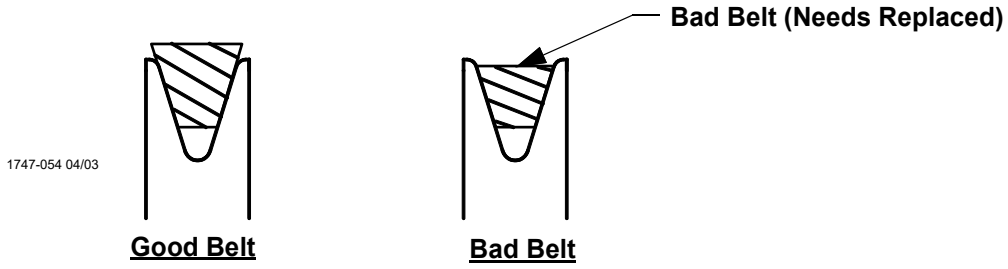

- Check Belt Tension. The Belt should be tensioned just tight enough to minimize Belt slippage. Over tensioning the belt will cause premature Belt and Bearing wear. With a new Belt the Idler Sheave indicator mark should line up with the third notch in the Tensioner Housing.

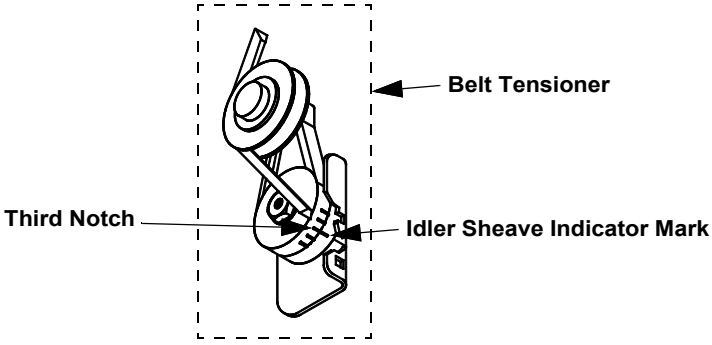

- Check Sheaves for wear. Replace if a Sheave groove is worn.



Fan Bearing and Belt Tensioner Lubrication

- Grease zerks are provided for lubrication on the fan shaft bearings and the belt tensioner.
- Lubricate the fan every 2-6 months or whenever these components get wet.
- Disconnect power to the fan before lubricating.
- Clean the zerk before lubricating to prevent contamination from entering the bearing.
- Use a high quality lithium based, NLGI #2, grease such as Shell Gadus S2 V100 2. Do not use incompatible greases containing aluminum, barium, calcium, bentonite clay or polyurea thickeners.
- Slowly rotate the fan shaft by hand while slowly applying the grease. Rapidly applying grease to a stationary bearing can damage the bearing seals.
- Apply about .10 oz (2.8 g, 3.1 cc) of grease at a time or until a slight amount of grease can be seen purging from the seal.

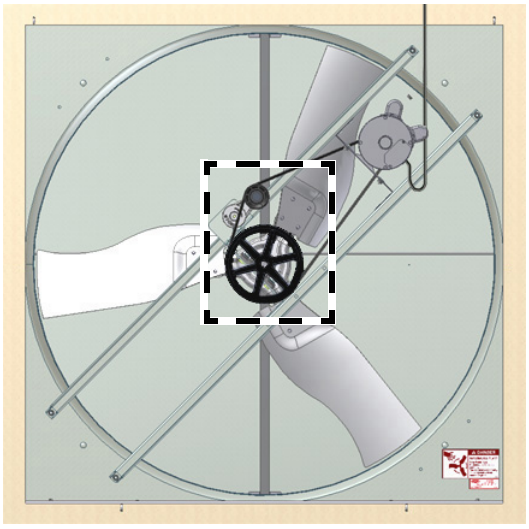

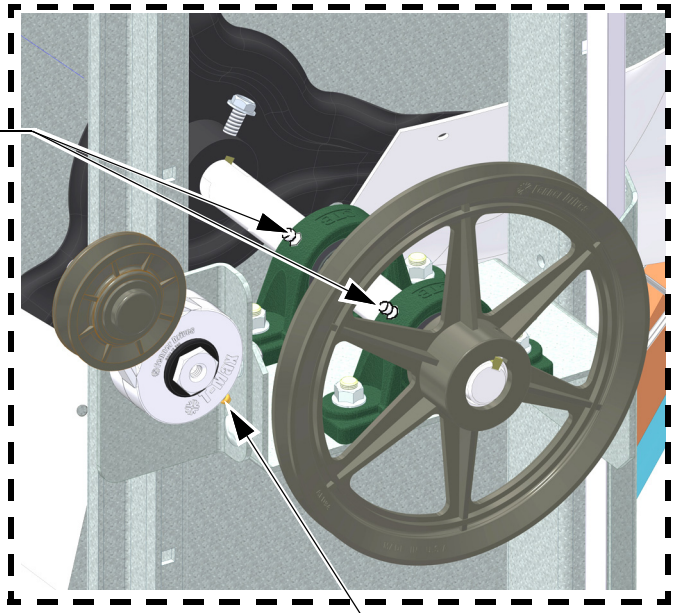

Note: Some Parts removed for Clarity

Hardware (actual size)



(2150) Bolt, 5/16-18x 1.25



(8490) Flange Nut, 5/16-18

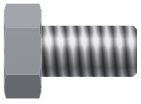

(1839) Bolt, 5/16-18x .5

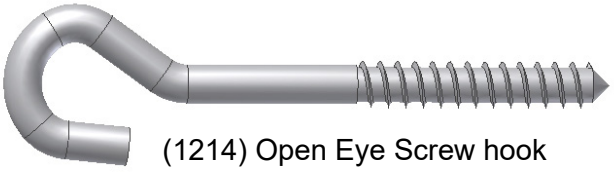

(1214) Open Eye Screw hook

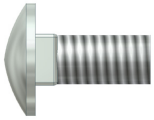

(8282) Carriage Bolt, 5/16-18x .625



(51039) Lag Screw, 1/4-10x 1.75



(732) Cable Clamp (Optional)

Part Numbers

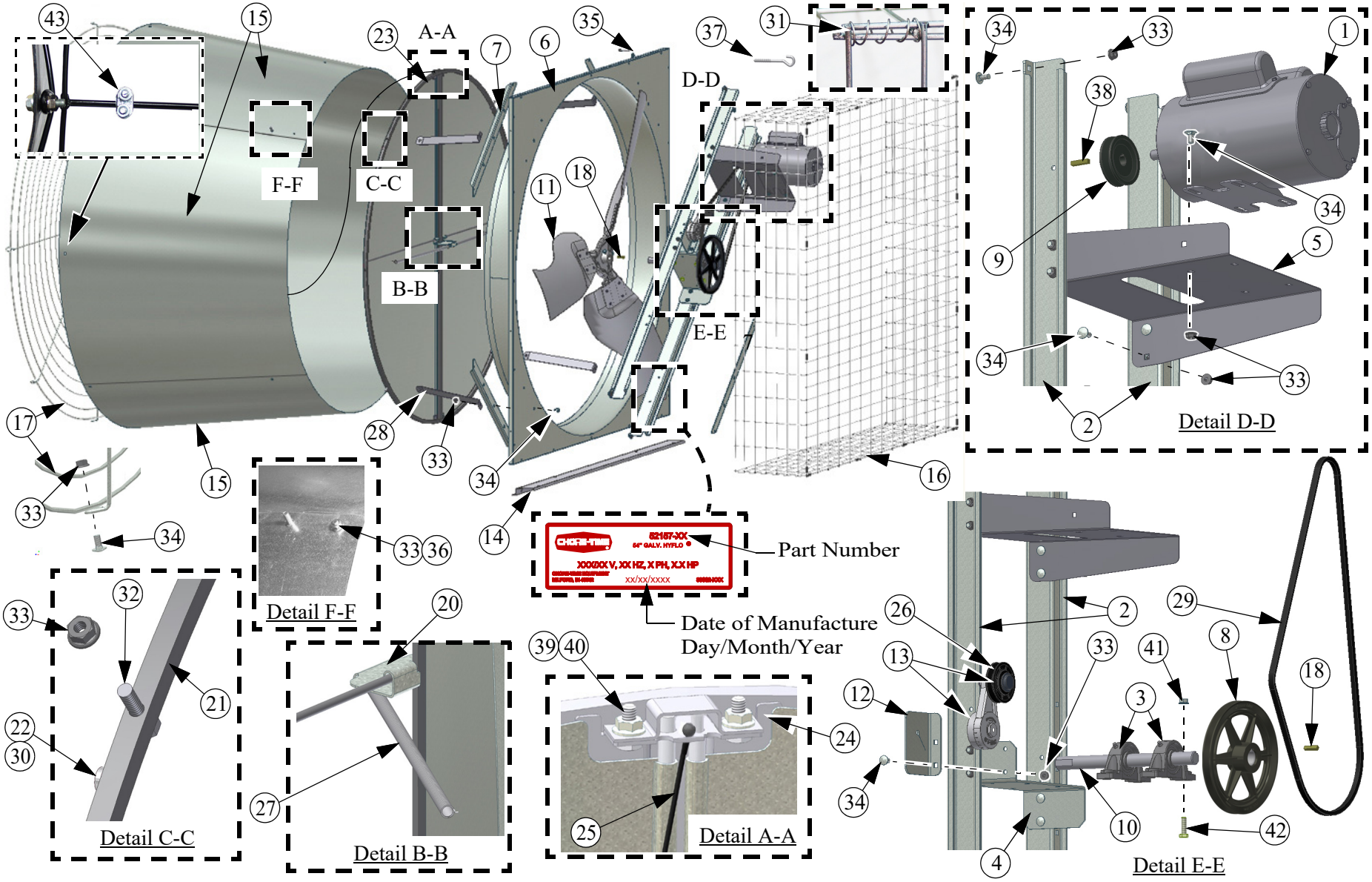

Part Numbers (Itemized)

54" Galv. Hyflo® Fan Part Numbers 52157-XX			
Item	Part Description	Part No.	Models-XX
1	Motor, 1.5 H 1-60-230	56708	-21
	Motor, 1.5 H 1-60 230 1725 rpm	56850	-22
	Motor, 1.5 H 3-60/50-200-230/460V 1725/1425 rpm	56102	-41,-42,-51,-51T,-52
2	Post, Fan	52079	All
3	Bearing, 1" Pillow Block	50553	All
4	Bearing Support, Idler Drive	48395	All
5	Motor Support, Idler Drive	48396	All
6	Shroud, Fan	51018	All
7	Support, Corner	52078	All
8	Sheave, Composite AFD94100	54897	-21,-22,-41,-42
	Sheave, Composite AFD84100	54898	,-51T,-52
9	Sheave, AK30 3" O.D. 5/8 Bore	8773	-21,-22,-41,-42
	Sheave, 3.25 O.D. (AK32)	48504	-51,-51T,-52
10	Shaft, 1" x 11.97	52083	All
11	Blade, Energy Efficient	52111	-22,-42,-52
	Blade, HI Cap	52176	-21,-41,-51,-51T
12	Tensioner Support	48394	All
13	Tensioner Assembly (with Idler)	48429	All
14	54" Fan Shelf	52082	All
15	54" Cone Panel	52110	All
16	Screen, 56x56x12.35 (2 x 4 mesh)	48794	-21,-22,-41,-42,-51,-52
	Screen, Hyflo Fan Inlet 56 x 56 x 12.35 (2 x 2 mesh)	56251	-51T
17	Grill, 64" O.D.	56230	All
18	Key, 1/4" Sq. x 1.13	2419-2	All
19	Cable Clamp (See Page 14)	732	Optional
20	Support, Hyflo® Door Spring	49450	All
21	Frame, 54" Hyflo®Door	51454	All
22	Magnet, .125 x .50 Dia.	48427	All
23	Door, 54" Hyflo®	52085	All
24	Fan Door Pivot Plate	49598	All
25	Cable Assembly	50618-4	All
26	Idler with Bushings (For Repair)	50879	All
27	Spring, Door Closing	49629	All
28	Bracket, 54" Fan Cone Support	52080	All
29	V-Belt, AX60	48541	-21,-22,-41,-42
	V-Belt, AX59	48615	-51,-51T,-52
30	Pop Rivet, SS 1/8 x .40	48936	All
31	Screen Spring (Package of 4)	54480-4	All
32	Bolt, 5/16-18 x 1-1/4	2150	All
33	Nut, 5/16-18 Hex Flange	8490	All
34	Bolt, Carriage 5/16-18 x .626	8282	All
35	Lag Screw, 1/4 x 1-1/2	51039	All
36	Bolt, 5/16-18 x .1/2"	1839	All
37	Hook, Open Eye Screw	1214	All
38	Key, 3/16 x 1-3/8" (Repair Part)	2112-1	All
39	Nut, 1/4-20 Serrated Flange	46460	All
40	Bolt, 1/4-20 x 5/8"	2152	All
41	Nut, 3/8 x 16 Serrated Flange	39-45692	All
42	Bolt, 3/8 x 16 x 1.25	39-20414	All
43	Cable Clamp (Optional)	732	All

Made to work.

Built to last.®

Revisions to this Manual

Page No.	Description of Change	ECO
15	New Grill and Changed 49504 to 732 Cable Clamp	
21	Replaced 49504 with 732	
22,23	Added Item 43 732 Cable Clamp	
23	Item 17 Changed 49501 Grill to 56230	41235
Various	Pictorial changes to show new Grill	

For additional parts and information, contact your nearest Chore-Time distributor or representative.
Find your nearest distributor at: www.choretime.com/contacts

CTB, Inc.
PO Box 2000
Milford, Indiana 46542-2000 USA
Phone (574) 658-4101 Fax (877) 730-8825
Email: choretime@choretime.com
Internet: www.choretime.com